SLIDE UNIT

SLIDE UNIT

A wide variety of linear motion slide units are available. Their high precision blocks increase the accuracy of machinery and other equipment. The blocks can be constructed of resin to reduce cost and weight. The use of standard shaft end supports and shaft support rails simplifies the components. The use of commercial units help to reduce design time and installation and component costs.

TYPES

Table E-1

types		description			shaft support type	page
metric series	block type	SMA		housing material : aluminum alloy commonly used standard type inner contact diameter : ϕ3～60	SH-A SH SHF	P.E-8
		SMA-W		double wide housing material : aluminum alloy inner contact diameter : ϕ3～60		P.E-10
		AK		compact type housing material : aluminum alloy inner contact diameter : ϕ6～30		P.E-12
		AK-W		compact type double wide housing material : aluminum alloy inner contact diameter : ϕ6～30		P.E-14
		SMB		housing material : aluminum alloy inner contact diameter : ϕ13～40		P.E-16

Table E-2

types		description		shaft support type	page
metric series	block type	RB	light weight housing material : resin cost effective inner contact diameter : ϕ10～20	SH-A SH SHF	P.E-28
	pillow block type	SMP	self-aligning feature housing material : cast iron inner contact diameter : ϕ13～60		P.E-18
	adjustable type	SMJ	clearance adjustable housing material : aluminum alloy inner contact diameter : ϕ10～60		P.E-20
	open type	SME	open type housing material : aluminum alloy suitable for a long distance application inner contact diameter : ϕ10～50	SA	P.E-22
		SME-W	open type double wide moment resistant housing material : aluminum alloy inner contact diameter : ϕ10～30		P.E-24
		SMD	open type clearance adjustable housing material : aluminum alloy inner contact diameter : ϕ16～30		P.E-26

Table E-3

types		description		page
metric series	shaht supporter	SH-A	shaft end supporter material : aluminum alloy (SH-A), cast iron (SH) inner contact diameter : ϕ8～60 (SH-A), ϕ10～60 (SH)	P.E-29
		SH		P.E-30
		SHF/SHF-FC	shaft end supporter flanged type material : aluminum alloy (SHF 10-60) cast iron (SHF-FC 35-60) inner contact diameter : ϕ10～60	P.E-31
	shaft support rail	SA	shaft support rail for open type block material : aluminum alloy maximum length : 600mm inner contact diameter : ϕ10～50	P.E-32
	assembly	CE(compact type) 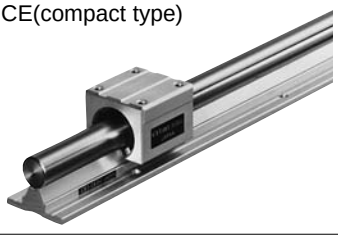	open type block and support rail assembly easy installation cost performance available clearance adjustable type and compact block type standard maximum length : 2,000mm longer length are available Please contact NB in case of the length exceeds 2,000mm inner contact diameter : ϕ16～30	P.E-34
		CD(adjustable type) 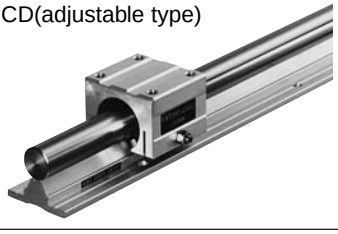		P.E-36

Table E-4

types		description		shaft support type	page
inch series	block type	SWA	housing material : aluminum alloy inner contact diameter : ϕ1/4"～2"	WH-A	P.E-38
	adjustable type	SWJ	clearance adjustable housing material : aluminum alloy inner contact diameter : ϕ1/2"～2"		P.E-40
	open type	SWD	open type clearance adjustable housing material : aluminum alloy inner contact diameter : ϕ1/2"～2"	WA	P.E-42
	resin block type	RBW	light weight housing material : resin cost effective inner contact diameter : ϕ1/2"～1"	WH-A	P.E-44
	shaft supporter	WH-A	shaft end supporter material : aluminum alloy inner contact diameter : ϕ1/4"～2"	–	P.E-45
	shaft support rail	WA	shaft support rail for open type block material : aluminum alloy maximum length : 24" inner contact diameter : ϕ1/2"～2"		P.E-46

See C-1 TOPBALL PRODUCTS.

ACCURACY

The accuracy of the SA type and CE/CD-types support rails are measured as shown in Figure E-1.

Figure E-1 Measurement Method

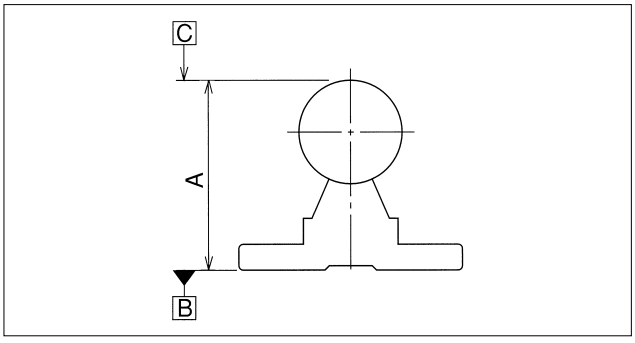

Figure E-2 Accuracy of SA Type Support

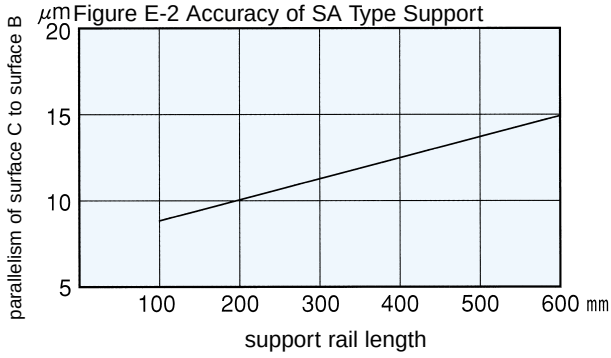

Figure E-3 Accuracy of CE/CD-Type Support Rails

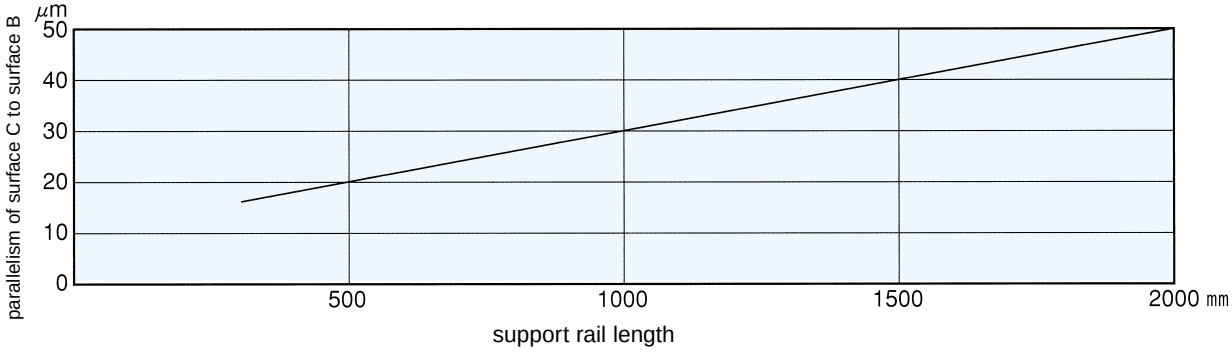

LIFE

The life of a slide unit is estimated using the following equations, which are similar to that of a slide bushing.

Travel life:

$$L = \left(\frac{f_H \cdot f_T \cdot f_C}{f_W} \cdot \frac{C}{P} \right)^3 \cdot 50$$

L : travel life (km) f_H : hardness coefficient f_T : temperature coefficient
f_C : contact coefficient f_W : load coefficient C : dynamic load rating(N)
P : applied load(N)

※ When an open-type slide unit is used with the load in the direction shown in Figure E-4, the load rating must be calibrated using the coefficients listed in Table E-5.

Table E-5 Calibration Coefficients for Load Rating

part number		coefficient
SME(D)10G-16G	CE(D)16G	0.64
SME(D)20G	CE(D)20G	0.54
SME(D)25G-50G	CE(D)25G-30G	0.57

Contact NB for information on using steel retainers.

Life time:

$$L_h = \frac{L \cdot 10^3}{2 \cdot \ell_s \cdot n_1 \cdot 60}$$

Lh : life time(hr) ℓ_s : stroke distance (m)
n_1 : stroke frequency per min. (cpm)

Figure E-4 Load Direction

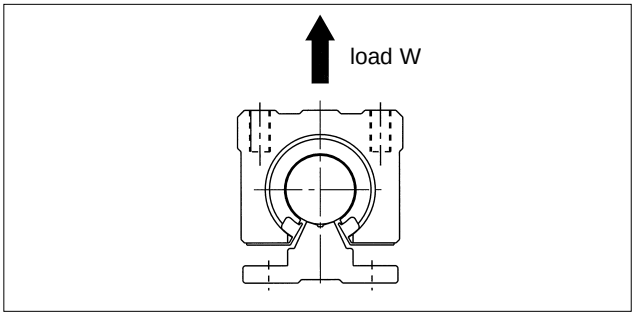

NOTES ON USAGE

Reference Surface:

A reference surface is provided with NB slide units as a standard feature. Excellent accuracy can be achieved by simply pushing the reference surface against the shoulder of the installation surface. (Excludes RB/RBW/SMP types)

Clearance Adjustment:

The adjustment of pre-load for the slide unit must be done carefully so that pre-load is not excessive. Care should be taken not to apply excessive torque when tightning the screws.

Mounting of RB Type Unit:

RB type unit has a resin housing. Mounting should be done using the proper torque values given in Table E-6.

Recommended Fit:

A standard grade slide bush is installed in NB slide units. For clearance and transition fit, g6 and h6 tolerance shafts, respectively, should be used. (Excludes adjustable-clearance type and open type)

Example: Special Installation Case of SMJ Type Slide Unit

When installing a Clearance Adjustable Unit such as illistrated in Figure D-7, please consult with NB. Special mounting holes will be required to allow for installations such as this.

Figure E-5 Reference Surface

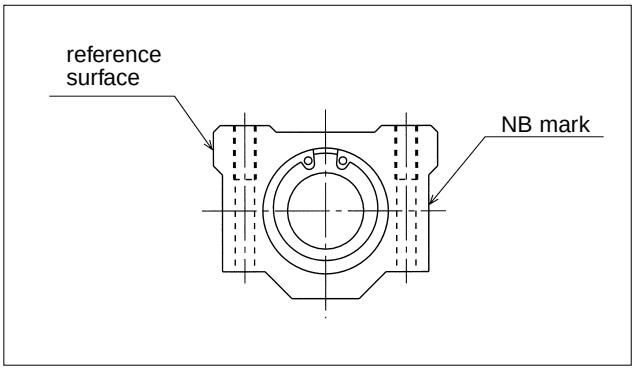

Table E-6 Torque Values

part number	mounting bolt	torque N-m
RB10～16	M4	1.8
RB20	M5	5.3

Figure D-7

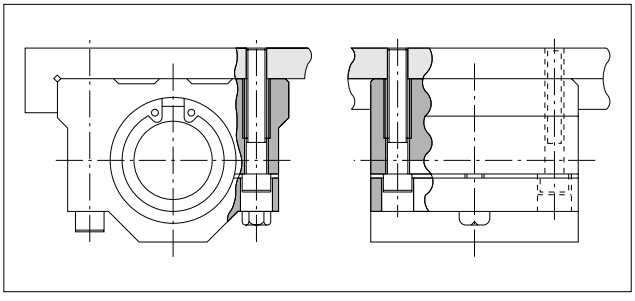

EXAMPLES OF SUPPORTING METHOD

1.Example of supporting the overall length of a slide shaft

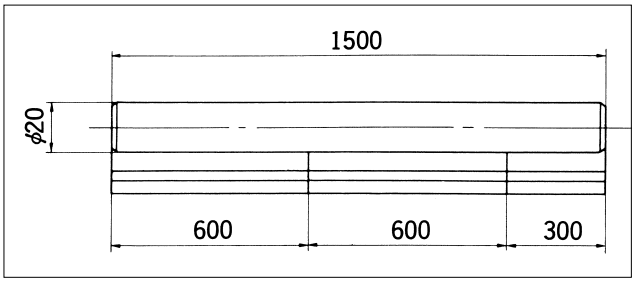

2.Example of supporting a slide shaft at certain intervals

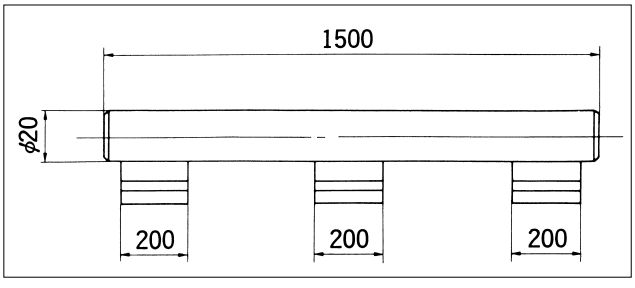

SMA TYPE

− Block Type −

part number structure example

SMSA | **25** | **G** | **UU**

specification

SMA	standard
SMSA	anticorrosion

inner contact diameter

retainer material

	standard	anti-corrosion
blank	steel	stainless
G	resin	

seal

blank	without seal
UU	seals on both sides

part number	inner contact diameter		major dimensions						
			outer dimensions						
		tolerance	h	E	W	L	F	G	T
	mm	μm	mm	mm	mm	mm	mm	mm	mm
SMA 3GUU	3	0 −8	5	8	16	13	10	8	−
SMA 4GUU	4		5.5	8.5	17	15	11	9	−
SMA 5GUU	5		7	11	22	18	14	11	−
SMA 6GUU	6	0 −9	9	15	30	25	18	15	6
SMA 8GUU	8		11	17	34	30	22	18	6
SMA10GUU	10		13	20	40	35	26	21	8
SMA12GUU	12		15	21	42	36	28	24	8
SMA13GUU	13		15	22	44	39	30	24.5	8
SMA16GUU	16		19	25	50	44	38.5	32.5	9
SMA20GUU	20	0 −10	21	27	54	50	41	35	11
SMA25GUU	25		26	38	76	67	51.5	42	12
SMA30GUU	30		30	39	78	72	59.5	49	15
SMA35GUU	35	0 −12	34	45	90	80	68	54	18
SMA40GUU	40		40	51	102	90	78	62	20
SMA50GUU	50		52	61	122	110	102	80	25
SMA60GUU	60	0/−15	58	66	132	122	114	94	30

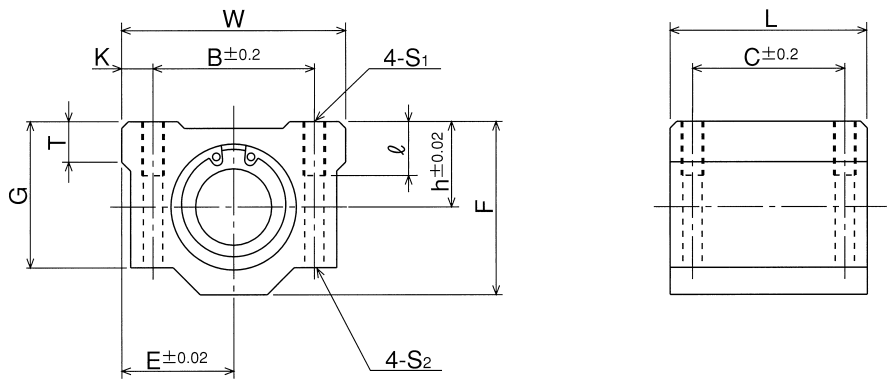

mounting dimensions						basic load rating		mass	part number
						dynamic	static		
B	C	K	S_1	ℓ	S_2	C	Co		
mm	mm	mm		mm	mm	N	N	g	
11	8	2.5	M 2	–	–	69	105	5	SMA 3GUU
12	10	2.5	M 3	–	–	88	127	7	SMA 4GUU
16	12	3	M 3	–	–	167	206	14	SMA 5GUU
20	15	5	M 4	8	3.4	206	265	34	SMA 6GUU
24	18	5	M 4	8	3.4	274	392	52	SMA 8GUU
28	21	6	M 5	12	4.3	372	549	92	SMA10GUU
30.5	26	5.75	M 5	12	4.3	510	784	102	SMA12GUU
33	26	5.5	M 5	12	4.3	510	784	120	SMA13GUU
36	34	7	M 5	12	4.3	774	1,180	200	SMA16GUU
40	40	7	M 6	12	5.2	882	1,370	255	SMA20GUU
54	50	11	M 8	18	7	980	1,570	600	SMA25GUU
58	58	10	M 8	18	7	1,570	2,740	735	SMA30GUU
70	60	10	M 8	18	7	1,670	3,140	1,100	SMA35GUU
80	60	11	M10	25	8.7	2,160	4,020	1,590	SMA40GUU
100	80	11	M10	25	8.7	3,820	7,940	3,340	SMA50GUU
108	90	12	M12	25	10.7	4,700	10,000	4,270	SMA60GUU

1N≒0.102kgf

SMA-W TYPE

− Double-Wide Block Type −

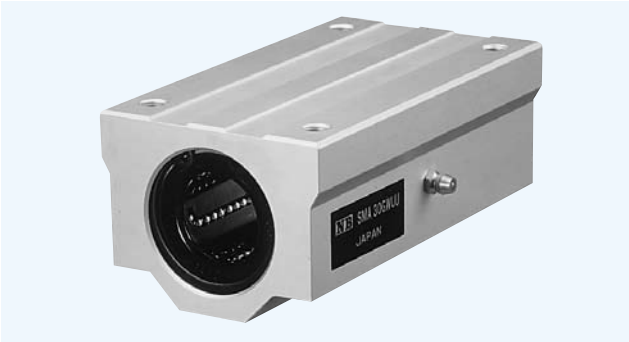

part number structure example

SMSA **25** **G** **W** **UU**

specification

SMA	standard
SMSA	anticorrosion

inner contact diameter

retainer material

	standard	anti-corrosion
blank	steel	stainless
G	resin	

seal

blank	without seal
UU	seals on both sides

double-wide type

part number	inner contact diameter		major dimensions							
			outer dimensions							
		tolerance	h	E	W	L	F	G	T	N
	mm	μm	mm	mm	mm	mm	mm	mm	mm	mm
SMA 3GWUU	3	0 −8	5	8	16	23	10	8	−	−
SMA 4GWUU	4		5.5	8.5	17	27	11	9	−	−
SMA 5GWUU	5		7	11	22	33	14	11	−	−
SMA 6GWUU	6	0 −9	9	15	30	48	18	15	6	7
SMA 8GWUU	8		11	17	34	58	22	18	6	7
SMA10GWUU	10		13	20	40	68	26	21	8	7
SMA12GWUU	12		15	21	42	70	28	24	8	6.5
SMA13GWUU	13		15	22	44	75	30	24.5	8	6.5
SMA16GWUU	16		19	25	50	85	38.5	32.5	9	6
SMA20GWUU	20	0 −10	21	27	54	96	41	35	11	7
SMA25GWUU	25		26	38	76	130	51.5	42	12	4
SMA30GWUU	30		30	39	78	140	59.5	49	15	5
SMA35GWUU	35	0 −12	34	45	90	155	68	54	18	5.5
SMA40GWUU	40		40	51	102	175	78	62	20	5
SMA50GWUU	50		52	61	122	215	102	80	25	5
SMA60GWUU	60	0/−15	58	66	132	240	114	94	30	5

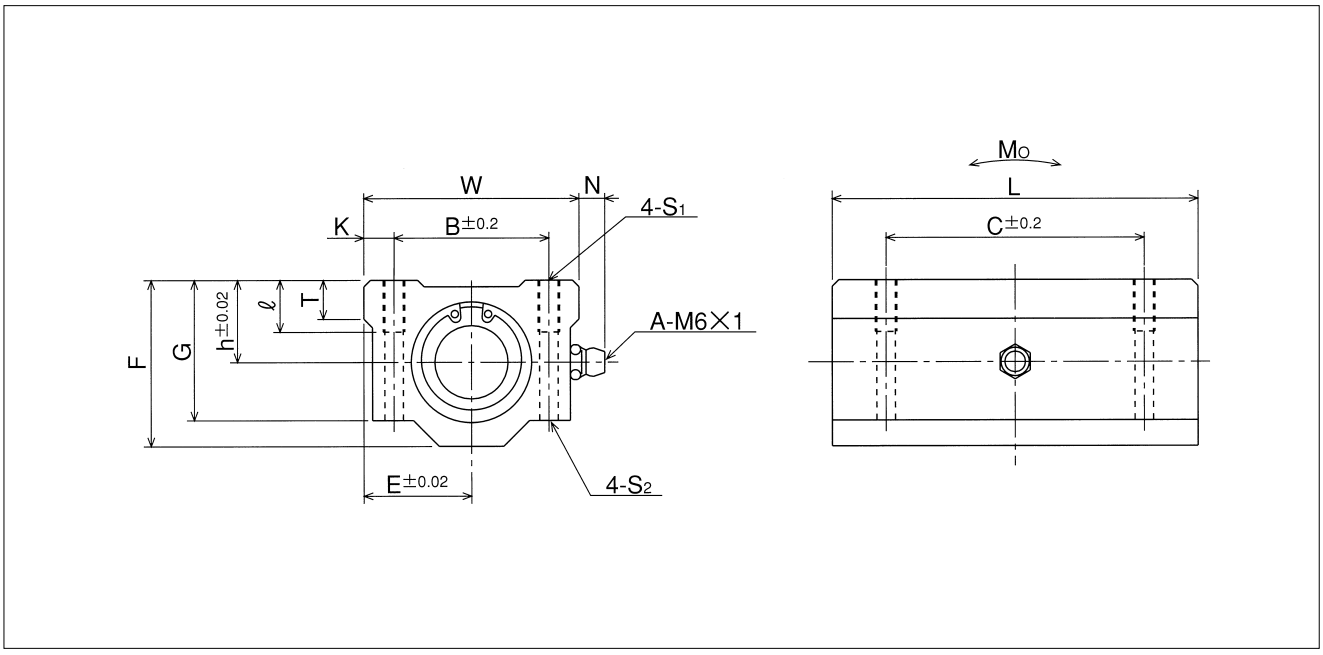

mounting dimensions						basic load rating		allowable static moment	mass	part number
						dynamic	static			
B	C	K	S_1	ℓ	S_2	C	Co	Mo		
mm	mm	mm		mm	mm	N	N	N・m	g	
11	16	2.5	M 2	–	–	108	206	0.49	10	SMA 3GWUU
12	20	2.5	M 3	–	–	137	255	0.72	13	SMA 4GWUU
16	25	3	M 3	–	–	265	412	1.54	27	SMA 5GWUU
20	36	5	M 4	8	3.4	323	530	2.18	63	SMA 6GWUU
24	42	5	M 4	8	3.4	431	784	4.31	102	SMA 8GWUU
28	46	6	M 5	12	4.3	588	1,100	7.24	180	SMA10GWUU
30.5	50	5.75	M 5	12	4.3	813	1,570	10.9	205	SMA12GWUU
33	50	5.5	M 5	12	4.3	813	1,570	11.6	240	SMA13GWUU
36	60	7	M 5	12	4.3	1,230	2,350	19.7	400	SMA16GWUU
40	70	7	M 6	12	5.2	1,400	2,740	26.8	570	SMA20GWUU
54	100	11	M 8	18	7	1,560	3,140	43.4	1,200	SMA25GWUU
58	110	10	M 8	18	7	2,490	5,490	82.8	1,480	SMA30GWUU
70	120	10	M 8	18	7	2,650	6,270	110	2,200	SMA35GWUU
80	140	11	M10	25	8.7	3,430	8,040	147	3,200	SMA40GWUU
100	160	11	M10	25	8.7	6,080	15,900	397	6,700	SMA50GWUU
108	180	12	M12	25	10.7	7,550	20,000	530	8,560	SMA60GWUU

1N≒0.102kgf　1N・m≒0.102kgf・m

AK TYPE

− Compact Block Type −

part number structure example

AKS **25** **G** **UU**

specification

AK	standard
AKS	anticorrosion

inner contact diameter

seal

blank	without seal
UU	seals on both sides

retainer material

	standard	anticorrosion
blank	steel	stainless
G	resin	

part number	inner contact diameter		outer dimensions					major dimensions	
	mm	tolerance μm	h mm	E mm	W mm	L mm	F mm	L_2 mm	S_1
AK 6GUU	6	0 −9	14	8	16	27	22	18	M 4
AK 8GUU	8		16	10	20	32	26	20	M 5
AK10GUU	10		19	13	26	39	32	27	M 6
AK12GUU	12		20	14	28	40	34	27	M 6
AK13GUU	13		25	15	30	42	43	28	M 6
AK16GUU	16		27	18	36	47	49	32	M 6
AK20GUU	20	0 −10	31	21	42	52	54	36	M 8
AK25GUU	25		37	26	52	69	65	42	M10
AK30GUU	30		40	29	58	74	71	44	M10

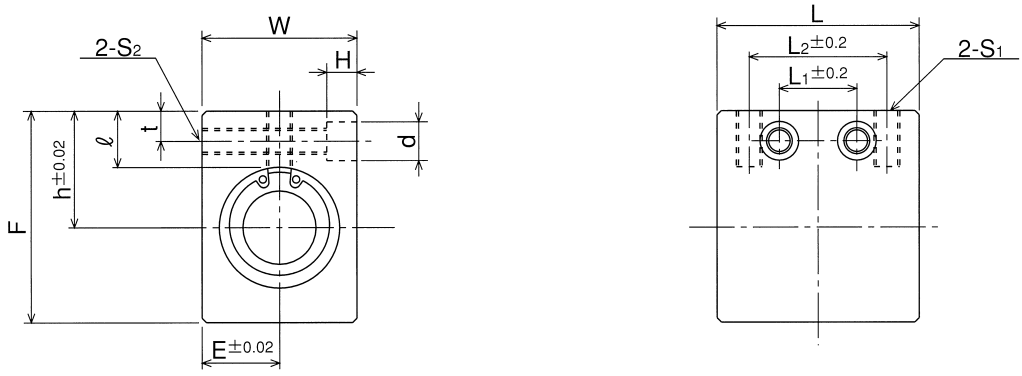

mounting dimensions						basic load rating		mass	part number
						dynamic	static		
ℓ	L_1	t	S_2	d	H	C	Co		
mm	mm	mm		mm	mm	N	N	g	
8	9	5	M 4	6	5	206	265	21.5	**AK 6GUU**
8.5	10	5	M 4	6	5	274	392	40	**AK 8GUU**
9.5	15	6	M 5	8	6	372	549	80	**AK10GUU**
9.5	15	6	M 5	8	6	510	784	90	**AK12GUU**
13.5	16	7	M 6	9	7	510	784	132	**AK13GUU**
13	18	7	M 6	9	7	774	1,180	204	**AK16GUU**
15	18	8	M 8	11	8	882	1,370	272	**AK20GUU**
17	22	9	M10	14	10	980	1,570	574	**AK25GUU**
17.5	22	9	M10	14	10	1,570	2,740	710	**AK30GUU**

1N≒0.102kgf

AK-W TYPE

– Double-Wide Compact Block Type –

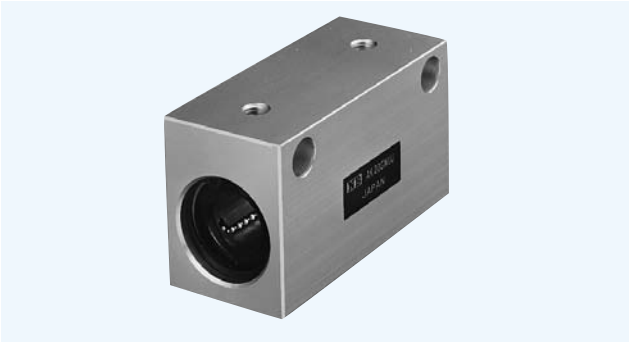

part number structure example

AKS	25	G	W	UU

specification

AK	standard
AKS	anticorrosion

inner contact diameter

retainer material

	standard	anticorrosion
blank	steel	stainless
G	resin	

seal

blank	without seal
UU	seals on both sides

double-wide type

part number	inner contact diameter		outer dimensions					major dimensions		
	mm	tolerance μm	h mm	E mm	W mm	L mm	F mm	L_2 mm	S_1	ℓ mm
AK 6GWUU	6	0 −9	14	8	16	46	22	20	M 4	8
AK 8GWUU	8		16	10	20	56	26	30	M 5	8.5
AK10GWUU	10		19	13	26	68	32	36	M 6	9.5
AK12GWUU	12		20	14	28	70	34	36	M 6	9.5
AK13GWUU	13		25	15	30	74	43	42	M 6	13.5
AK16GWUU	16		27	18	36	84	49	52	M 6	13
AK20GWUU	20	0 −10	31	21	42	94	54	58	M 8	15
AK25GWUU	25		37	26	52	128	65	80	M10	17
AK30GWUU	30		40	29	58	138	71	90	M10	17.5

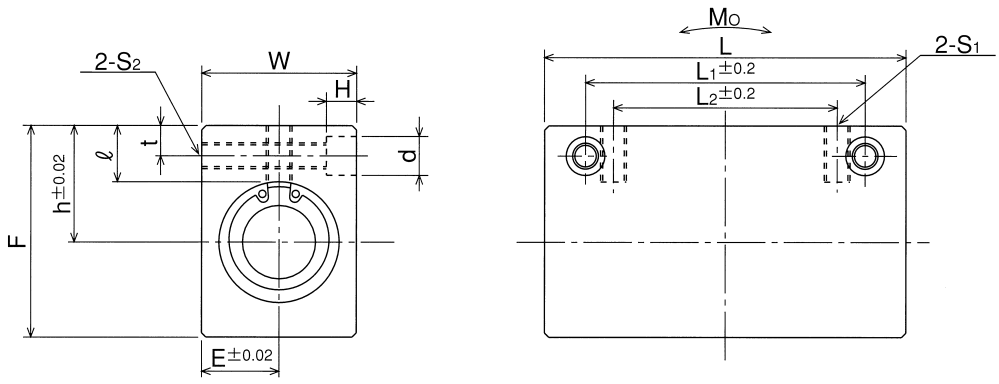

mounting dimensions					basic load rating		allowable static moment	mass	part number
					dynamic	static			
L_1	t	S_2	d	H	C	Co	Mo		
mm	mm		mm	mm	N	N	N・m	g	
30	5	M 4	6	5	323	530	2.18	40	**AK 6GWUU**
42	5	M 4	6	5	431	784	4.31	75	**AK 8GWUU**
50	6	M 5	8	6	588	1,100	7.24	150	**AK10GWUU**
50	6	M 5	8	6	813	1,570	10.9	168	**AK12GWUU**
55	7	M 6	9	7	813	1,570	11.6	248	**AK13GWUU**
65	7	M 6	9	7	1,230	2,350	19.7	383	**AK16GWUU**
70	8	M 8	11	8	1,400	2,740	26.8	520	**AK20GWUU**
100	9	M10	14	10	1,560	3,140	43.4	1,120	**AK25GWUU**
110	9	M10	14	10	2,490	5,490	82.8	1,384	**AK30GWUU**

1N≒0.102kgf　1N・m≒0.102kgf・m

SMB TYPE

– Block Type –

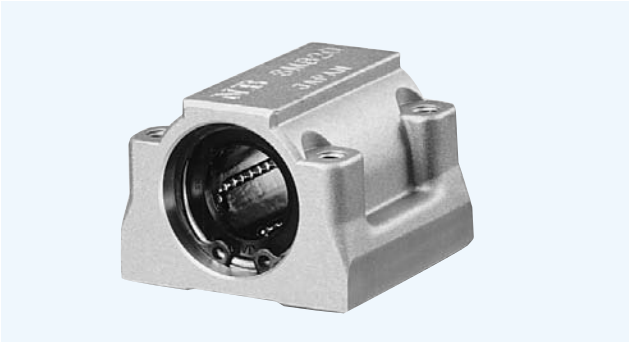

part number structure example

SMSB | **25** | **G** | **UU**

specification

SMB	standard
SMSB	anticorrosion

inner contact diameter

seal

blank	without seal
UU	seals on both sides

retainer material

	standard	anticorrosion
blank	steel	stainless
G	resin	

part number	inner contact diameter		outer dimensions						major dimensions
	mm	tolerance μm	h mm	E mm	W mm	L mm	F mm	G mm	T mm
SMB13GUU	13	0 / −9	16	22	44	39	31	22	8
SMB16GUU	16		19	25	50	49	37	28	9
SMB20GUU	20	0 / −10	21	27	54	55	41	31	11
SMB25GUU	25		26	38	76	73	51	38	12
SMB30GUU	30		30	39	78	80	57	45	15
SMB40GUU	40	0/−12	40	51	102	96	75	59	22

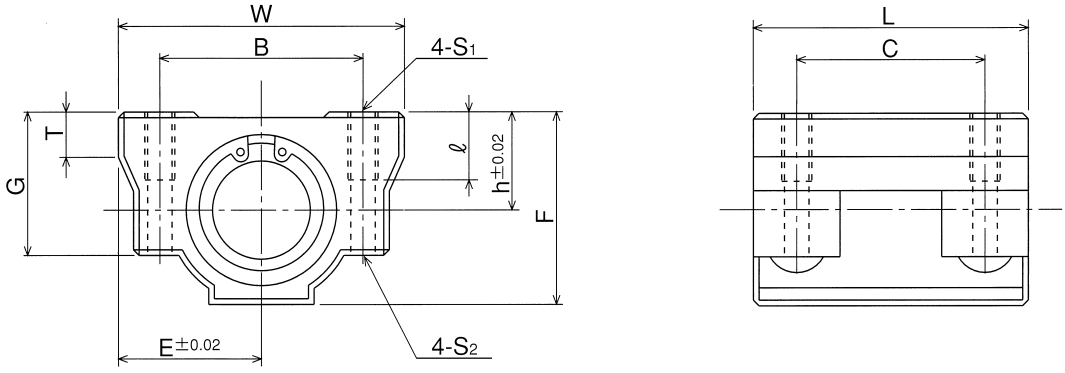

mounting dimensions					basic load rating		mass	part number
					dynamic	static		
B mm	C mm	S_1	ℓ mm	S_2 mm	C N	Co N	g	
33	26	M 5	10	4.3	510	784	120	**SMB13GUU**
36	34	M 5	12	4.3	774	1,180	170	**SMB16GUU**
40	40	M 6	12	5.1	882	1,370	210	**SMB20GUU**
54	50	M 8	18	6.8	980	1,570	500	**SMB25GUU**
58	58	M 8	18	6.8	1,570	2,740	600	**SMB30GUU**
80	60	M10	25	8.6	2,160	4,020	1,200	**SMB40GUU**

1N≒0.102kgf

SMP TYPE

– Pillow Block Type –

part number structure example

SMP | **25** | **G** | **UU**

SMP type

inner contact diameter

seal

blank	without seal
UU	seals on both sides

retainer material

blank	steel
G	resin

part number	inner contact diameter		major dimensions						
			outer dimensions						
		tolerance	h	E	W	L	F	G	M
	mm	μm	mm	mm	mm	mm	mm	mm	mm
SMP13GUU	13	0 −9	25	25	50	32	46	8	36
SMP16GUU	16		29	27.5	55	37	53	10	40
SMP20GUU	20	0 −10	34	32.5	65	42	62	12	48
SMP25GUU	25		40	38	76	59	73	12	59
SMP30GUU	30		45	42.5	85	64	84	15	69
SMP35GUU	35	0 −12	50	49	98	70	94	15	76
SMP40GUU	40		60	62	124	80	112	18	86
SMP50GUU	50		70	72	144	100	134	20	105
SMP60GUU	60	0/−15	82	84.5	169	110	154	23	115

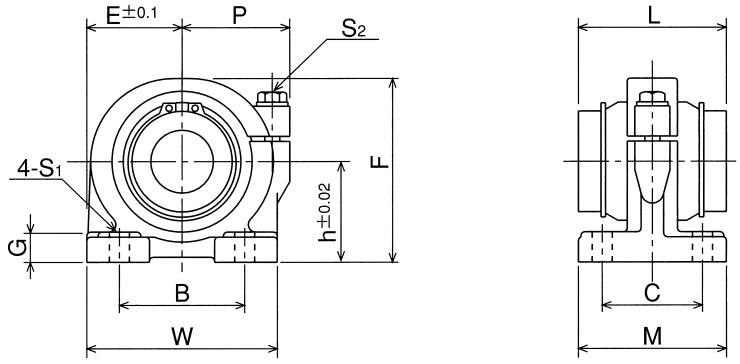

	mounting dimensions			adjustment bolt size	basic load rating		mass	part number
					dynamic	static		
P	B	C	S_1(bolt size)	S_2	C	Co		
mm	mm	mm	mm		N	N	g	
30	30	26	7(M 5)	M 5	510	784	270	**SMP13GUU**
32	35	29	7(M 5)	M 5	774	1,180	380	**SMP16GUU**
37	40	35	8(M 6)	M 6	882	1,370	680	**SMP20GUU**
43	50	40	8(M 6)	M 6	980	1,570	1,000	**SMP25GUU**
49	58	46	10(M 8)	M 8	1,570	2,740	1,400	**SMP30GUU**
58	62	53	12(M10)	M10	1,670	3,140	2,100	**SMP35GUU**
68	76	64	12(M10)	M10	2,160	4,020	3,700	**SMP40GUU**
80	100	70	14(M12)	M12	3,820	7,940	6,100	**SMP50GUU**
88	115	80	14(M12)	M12	4,700	10,000	8,700	**SMP60GUU**

1N≒0.102kgf

SMJ TYPE

– Clearance Adjustable Type –

part number structure example

SMSJ | **25** | **G** | **UU**

specification

SMJ	standard
SMSJ	anticorrosion

inner contact diameter

seal

blank	without seal
UU	seals on both sides

retainer material

	standard	anticorrosion
blank	steel*	stainless*
G	resin	

*Size 10 is provided with resin retainer type only.

part number	inner contact diameter	outer dimensions							major dimensions
		h	E	W	L	F	G	T	B
	mm	mm	mm	mm	mm	mm	mm	mm	mm
SMJ10GUU*	10	13	20	40	35	26	21	8	28
SMJ12GUU	12	15	21	42	36	28	24	8	30.5
SMJ13GUU	13	15	22	44	39	30	24.5	8	33
SMJ16GUU	16	19	25	50	44	38.5	32.5	9	36
SMJ20GUU	20	21	27	54	50	41	35	11	40
SMJ25GUU	25	26	38	76	67	51.5	42	12	54
SMJ30GUU	30	30	39	78	72	59.5	49	15	58
SMJ35GUU	35	34	45	90	80	68	54	18	70
SMJ40GUU	40	40	51	102	90	78	62	20	80
SMJ50GUU	50	52	61	122	110	102	80	25	100
SMJ60GUU	60	58	66	132	122	114	94	30	108

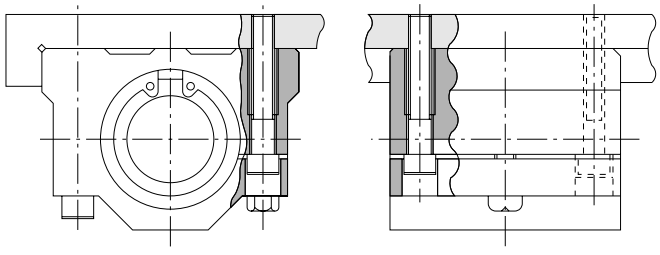

Please contact NB for information of counterbore machining for SMJ type as shown above.

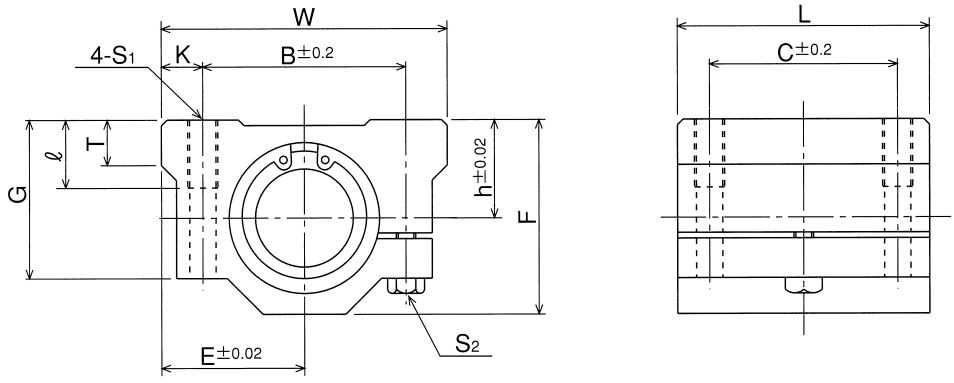

mounting dimensions				adjusting bolt size	basic load rating		mass	part number
C mm	K mm	S_1	ℓ mm	S_2	dynamic C N	static Co N	g	
21	6	M 5	12	M 4	372	549	92	**SMJ10GUU**
26	5.75	M 5	12	M 4	510	784	102	**SMJ12GUU**
26	5.5	M 5	12	M 4	510	784	120	**SMJ13GUU**
34	7	M 5	12	M 4	774	1,180	200	**SMJ16GUU**
40	7	M 6	12	M 5	882	1,370	255	**SMJ20GUU**
50	11	M 8	18	M 6	980	1,570	600	**SMJ25GUU**
58	10	M 8	18	M 6	1,570	2,740	735	**SMJ30GUU**
60	10	M 8	18	M 6	1,670	3,140	1,100	**SMJ35GUU**
60	11	M10	25	M 8	2,160	4,020	1,590	**SMJ40GUU**
80	11	M10	25	M 8	3,820	7,940	3,340	**SMJ50GUU**
90	12	M12	25	M10	4,700	10,000	4,270	**SMJ60GUU**

1N≒0.102kgf

SME TYPE

− Open Block Type −

part number structure example

SMSE | **25** | **G** | **UU**

specification

SMJ	standard
SMSE	anticorrosion

inner contact diameter

retainer material

	standard	anticorrosion
blank	steel*	stainless*
G	resin	

seal

blank	without seal
UU	seals on both sides

*Size 10 is provided with resin retainer type only.

part number	inner contact diameter mm	major dimensions						
		outer dimensions						
		h mm	E mm	W mm	L mm	F mm	T mm	h_1 mm
SME10GUU*	10	15	18	36	32	24	7	6
SME13GUU	13	17	20	40	39	28	8	8.5
SME16GUU	16	20	22.5	45	45	33	9	10
SME20GUU	20	23	24	48	50	39	11	10
SME25GUU	25	27	30	60	65	47	14	11.5
SME30GUU	30	33	35	70	70	56	15	14
SME35GUU	35	37	40	80	80	63	18	16
SME40GUU	40	42	45	90	90	72	20	19
SME50GUU	50	53	60	120	110	92	25	23

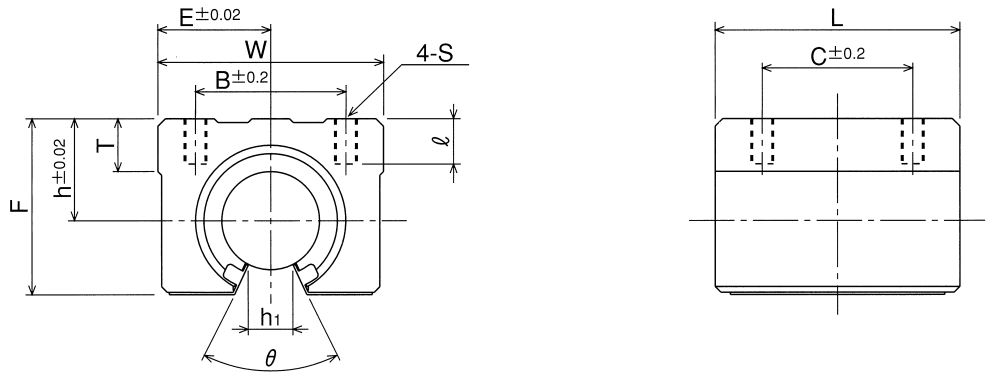

					basic load rating			
	mounting dimensions				dynamic	static	mass	part number
θ	B	C	S	ℓ	C	Co		
	mm	mm		mm	N	N	g	
80°	25	20	M 5	10	372	549	65	**SME10GUU**
80°	28	26	M 5	10	510	784	100	**SME13GUU**
80°	32	30	M 5	12	774	1,180	150	**SME16GUU**
60°	35	35	M 6	12	882	1,370	200	**SME20GUU**
50°	40	40	M 6	12	980	1,570	450	**SME25GUU**
50°	50	50	M 8	18	1,570	2,740	630	**SME30GUU**
50°	55	55	M 8	18	1,670	3,140	925	**SME35GUU**
50°	65	65	M10	20	2,160	4,020	1,330	**SME40GUU**
50°	94	80	M10	20	3,820	7,940	3,000	**SME50GUU**

1N≒0.102kgf

SME-W TYPE

– Double-wide Open Block Type –

part number structure example

SMSE **25** **G** **W** **UU**

specification

SME	standard
SMSE	anticorrosion

inner contact diameter

retainer material

	standard	anticorrosion
blank	steel*	stainless*
G	resin	

seal

blank	without seal
UU	seals on both sides

double-wide type

*Size 10 is provided with resin retainer type only.

part number	inner contact diameter mm	major dimensions							
		outer dimensions							
		h mm	E mm	W mm	L mm	F mm	T mm	N mm	h_1 mm
SME10GWUU*	10	15	18	36	65	24	7	7.5	6
SME13GWUU	13	17	20	40	75	28	8	7.5	8.5
SME16GWUU	16	20	22.5	45	85	33	9	7.5	10
SME20GWUU	20	23	24	48	95	39	11	7.5	10
SME25GWUU	25	27	30	60	130	47	14	7.5	11.5
SME30GWUU	30	33	35	70	140	56	15	7.5	14

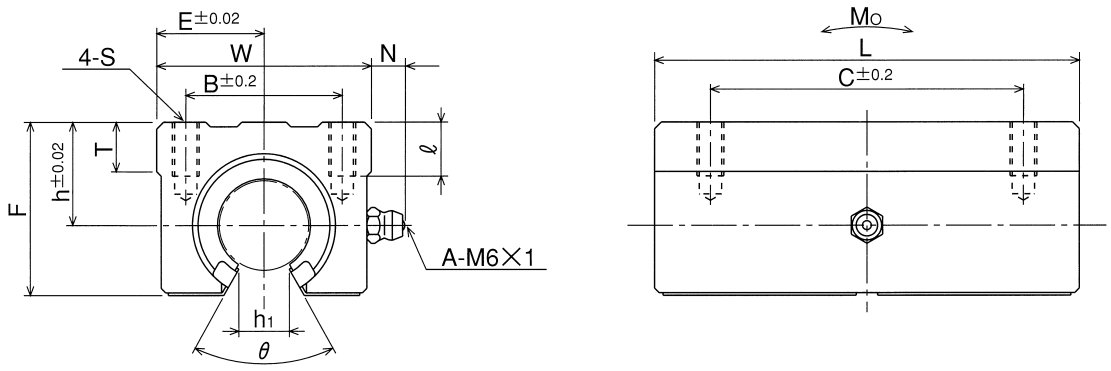

					basic load rating		allowable static moment	mass	part number
	mounting dimensions				dynamic	static			
θ	B mm	C mm	S	ℓ mm	C N	Co N	Mo N・m	g	
80°	25	40	M5	10	588	1,100	4.63	140	**SME10GWUU**
80°	28	50	M5	10	813	1,570	7.42	200	**SME13GWUU**
80°	32	60	M5	12	1,230	2,350	12.6	300	**SME16GWUU**
60°	35	70	M6	12	1,400	2,740	14.5	400	**SME20GWUU**
50°	40	90	M6	12	1,560	3,140	24.7	900	**SME25GWUU**
50°	50	100	M8	18	2,490	5,490	47.2	1,260	**SME30GWUU**

1N≒0.102kgf　1N・m≒0.102kgf・m

SMD TYPE

— Open Block with Clearance Adjustable Type —

part number structure example

SMSD | **25** | **G** | **UU**

specification

SMD	standard
SMSD	anticorrosion

inner contact diameter

seal

blank	without seal
UU	seals on both sides

retainer material

	standard	anticorrosion
blank	steel	stainless
G	resin	

part number	major dimensions								
	inner contact diameter	outer dimensions							
	mm	h mm	E mm	W mm	L mm	F mm	T mm	G mm	h_1 mm
SMD16GUU	16	20	25	50	45	33	9	6	10
SMD20GUU	20	23	27	54	50	39	11	7	10
SMD25GUU	25	27	38	76	65	47	14	7	11.5
SMD30GUU	30	33	39	78	70	56	15	7	14

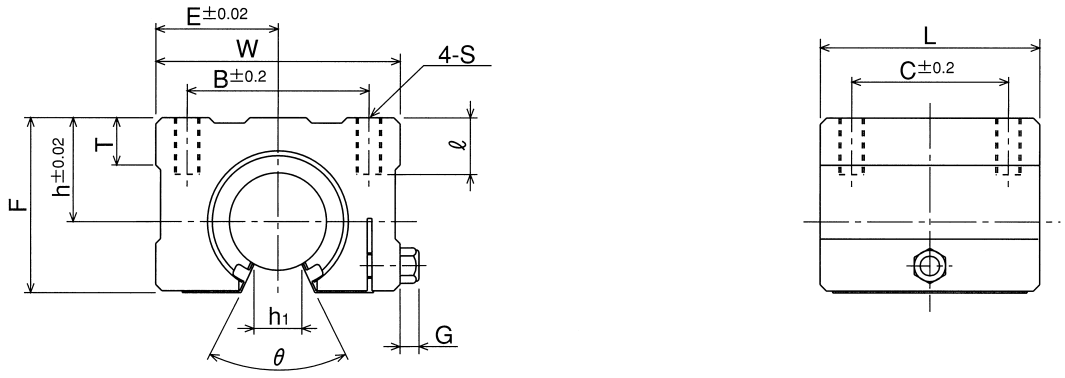

					basic load rating		mass	part number
	mounting dimensions				dynamic	static		
θ	B	C	S	ℓ	C	Co		
	mm	mm		mm	N	N	g	
80°	36	30	M5	12	774	1,180	170	**SMD16GUU**
60°	40	35	M6	12	882	1,370	240	**SMD20GUU**
50°	54	40	M6	12	980	1,570	580	**SMD25GUU**
50°	58	50	M8	18	1,570	2,740	720	**SMD30GUU**

1N≒0.102kgf

RB TYPE

− Resin Block Type −

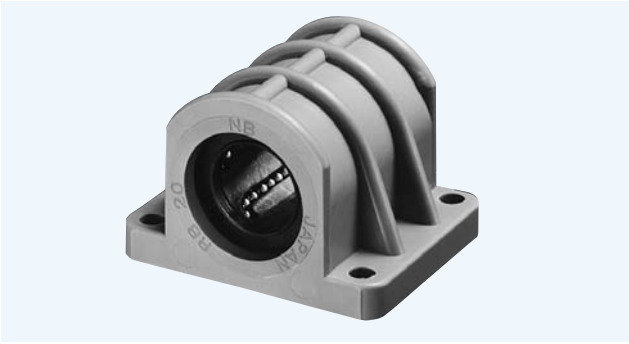

part number structure example

RB 20

RB type

inner contact diameter

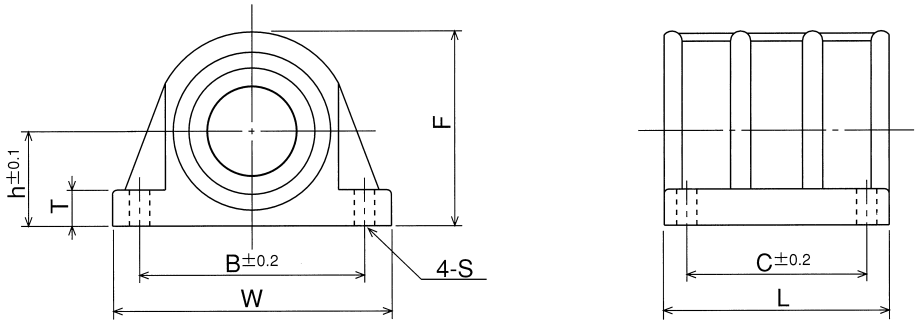

part number	major dimensions										basic load rating		mass
	inner contact diameter		outer dimensions				dimension				dynamic	static	
		tolerance	h	W	L	F	T	B	C	S	C	Co	
	mm	μm	mm	mm	mm	mm	mm	mm	mm	mm	N	N	g
RB10	10	0 −9	13	45	35	26.5	6	35	21	4.5	372	549	43
RB12	12		15	50	36	30	6.5	40	26	4.5	510	784	50
RB13	13		15	50	39	31	6.5	40	26	4.5	510	784	63
RB16	16		19	56	44	38.5	7	46	34	4.5	774	1,180	99
RB20	20	0/−10	21	62	50	43	8	50	40	5.5	882	1,370	127

(RB type has side seals as standard.)

1N≒0.102kgf

SH-A TYPE

− Shaft End Supporter − (Aluminum)

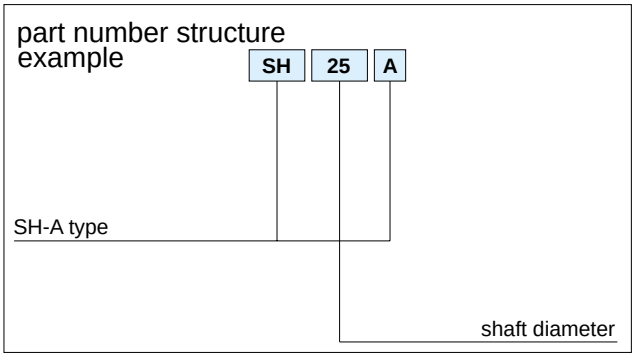

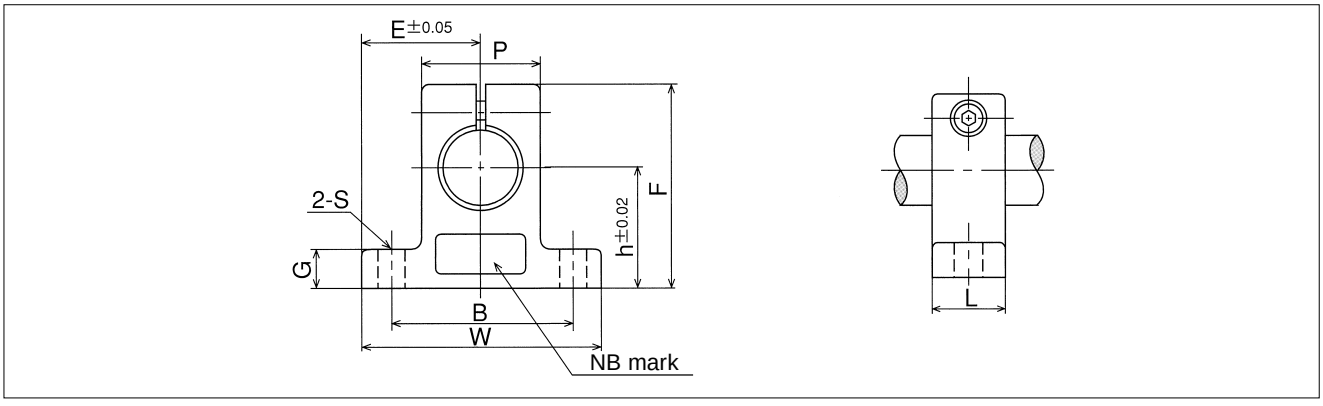

part number	shaft diameter mm	major dimensions h mm	E mm	W mm	L mm	F mm	G mm	P mm	B mm	S (bolt size) mm	adjusting bolt size	mass g
SH 8A	8	20	21	42	14	32.8	6	18	32	5.5(M 5)	M 4	24
SH10A	10	20	21	42	14	32.8	6	18	32	5.5(M 5)	M 4	24
SH12A	12	23	21	42	14	37.5	6	20	32	5.5(M 5)	M 4	30
SH13A	13	23	21	42	14	37.5	6	20	32	5.5(M 5)	M 4	30
SH16A	16	27	24	48	16	44	8	25	38	5.5(M 5)	M 4	40
SH20A	20	31	30	60	20	51	10	30	45	6.6(M 6)	M 5	70
SH25A	25	35	35	70	24	60	12	38	56	6.6(M 6)	M 6	130
SH30A	30	42	42	84	28	70	12	44	64	9 (M 8)	M 6	180
SH35A	35	50	49	98	32	82	15	50	74	11 (M10)	M 8	270
SH40A	40	60	57	114	36	96	15	60	90	11 (M10)	M 8	420
SH50A	50	70	63	126	40	120	18	74	100	14 (M12)	M12	750
SH60A	60	80	74	148	45	136	18	90	120	14 (M12)	M12	1,100

SH TYPE

− Shaft End Supporter − (Cast Iron)

part number structure example

SH 25

SH type — shaft diameter

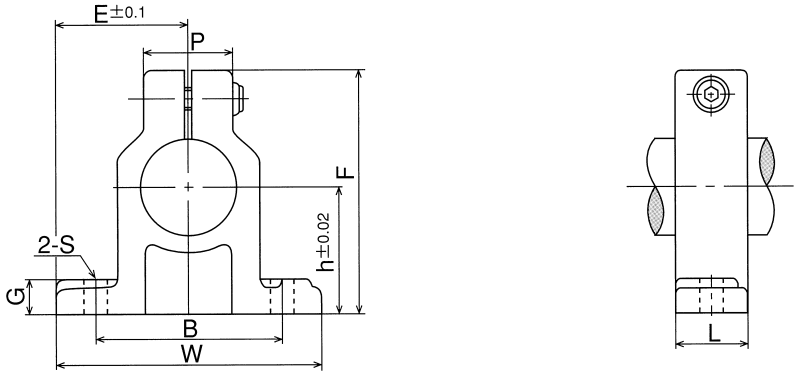

part number	shaft diameter	major dimensions									adjusting bolt size	mass
		h	E	W	L	F	G	P	B	S (bolt size)		
	mm	mm	mm	mm	mm	mm	mm	mm	mm	mm		g
SH10	10	20	22	44	15	35	7	19	32	4.5(M 4)	M 4	80
SH13	13	23	25	50	17	40	8	17	32	7 (M 5)	M 4	120
SH16	16	27	27.5	55	17	45	10	16	38	7 (M 5)	M 4	120
SH20	20	31	32.5	65	20	53	12	22	45	8 (M 6)	M 5	190
SH25	25	35	38	76	24	61	12	24	56	8 (M 6)	M 6	300
SH30	30	42	42.5	85	28	73	15	28	64	10 (M 8)	M 6	490
SH35	35	50	50	100	32	87	15	34	74	12 (M10)	M 8	690
SH40	40	60	60	120	36	104	18	38	90	12 (M10)	M10	1,200
SH50	50	70	70	140	40	122	20	48	100	14 (M12)	M12	1,700
SH60	60	80	82.5	165	45	140	23	58	120	14 (M12)	M12	2,500

SHF TYPE

– Shaft End Supporter Flange Type –

part number structure example

SHF | 25 | FC

none	aluminum casting
FC	iron casting

SHF type

shaft diameter

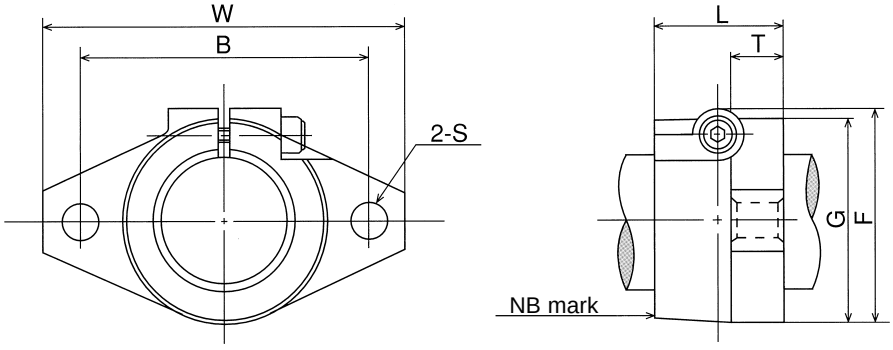

part number		shaft diameter	major dimensions							adjusting bolt size	mass g	
			W	L	T	F	G	B	S (bolt size)			
aluminum casting	iron casting	mm	mm	mm	mm	mm	mm	mm	mm		aluminum	iron
SHF10	–	10	43	10	5	24	20	32	5.5(M 5)	M 4	13	–
SHF12	–	12	47	13	7	28	25	36	5.5(M 5)	M 4	20	–
SHF13	–	13	47	13	7	28	25	36	5.5(M 5)	M 4	20	–
SHF16	–	16	50	16	8	31	28	40	5.5(M 5)	M 4	27	–
SHF20	–	20	60	20	8	37	34	48	7 (M 6)	M 5	40	–
SHF25	–	25	70	25	10	42	40	56	7 (M 6)	M 5	60	–
SHF30	–	30	80	30	12	50	46	64	9 (M 8)	M 6	110	–
SHF35	**SHF35FC**	35	92	35	14	58	50	72	12 (M10)	M 8	140	380
SHF40	**SHF40FC**	40	102	40	16	67	56	80	12 (M10)	M10	205	510
SHF50	**SHF50FC**	50	122	50	19	83	70	96	14 (M12)	M12	360	890
SHF60	**SHF60FC**	60	140	60	23	95	82	112	14 (M12)	M12	530	1,500

SA TYPE

– Shaft Support Rail –

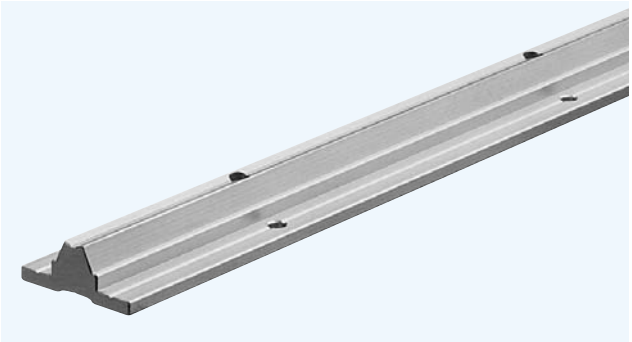

part number structure example

SA 20 - 500

- SA → SA type
- 20 → shaft diameter
- 500 → total length

part number	shaft diameter	major dimensions															mass
		H	E	W	L	F	T	K	J	h_1	θ	B	N	M×P	S_1	S_2	
	mm	mm	mm	mm	mm	mm	mm	mm	mm	mm		mm	mm	mm	mm	(bolt size)	g
SA10-200	10	18	16	32	200	13.5	4	8.9	12.4	4.7	80°	22	50	1×100	4.5	M4	110
SA10-300					300								50	2×100			160
SA10-400					400								50	3×100			220
SA10-500					500								50	4×100			270
SA10-600					600								50	5×100			330
SA13-200	13	21	17	34	200	15	4.5	9.8	15	6	80°	25	50	1×100	4.5	M4	140
SA13-300					300								50	2×100			210
SA13-400					400								50	3×100			280
SA13-500					500								50	4×100			350
SA13-600					600								50	5×100			420
SA16-200	16	25	20	40	200	17.8	5	11.7	18.5	8	80°	30	25	1×150	5.5	M5	200
SA16-300					300								75	1×150			300
SA16-400					400								50	2×150			400
SA16-500					500								25	3×150			500
SA16-600					600								75	3×150			600
SA20-200	20	27	22.5	45	200	17.7	5	10	19	8	50°	30	25	1×150	5.5	M6	200
SA20-300					300								75	1×150			300
SA20-400					400								50	2×150			400
SA20-500					500								25	3×150			510
SA20-600					600								75	3×150			610
SA25-200	25	33	27.5	55	200	21	6	12	21.5	8	50°	35	25	1×150	6.5	M6	290
SA25-300					300								50	1×200			430
SA25-400					400								100	1×200			580
SA25-500					500								50	2×200			730
SA25-600					600								100	2×200			880

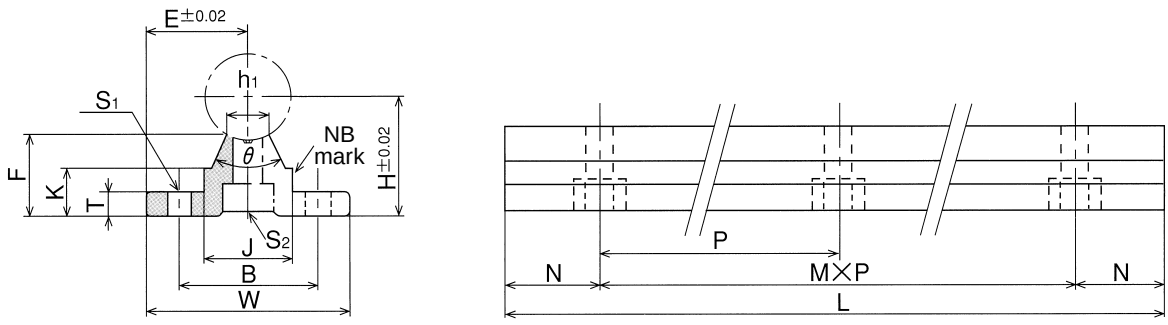

※ Mounting bolts for pre-drilled shaft are included.

part number	shaft diameter	major dimensions															mass
		H	E	W	L	F	T	K	J	h_1	θ	B	N	M×P	S_1	S_2	
	mm	mm	mm	mm	mm	mm	mm	mm	mm	mm		mm	mm	mm	mm	(bolt size)	g
SA30-200	30	37	30	60	200	22.8	7	13	26.5	10.3	50°	40	25	1×150	6.5	M 8	360
SA30-300					300								50	1×200			550
SA30-400					400								100	1×200			730
SA30-500					500								50	2×200			920
SA30-600					600								100	2×200			1,100
SA35-200	35	43	32.5	65	200	26.5	8	15.5	28	13	50°	45	25	1×150	9	M 8	460
SA35-300					300								50	1×200			700
SA35-400					400								100	1×200			950
SA35-500					500								50	2×200			1,190
SA35-600					600								100	2×200			1,420
SA40-200	40	48	37.5	75	200	29.4	9	17	38	16	50°	55	25	1×150	9	M 8	630
SA40-300					300								75	1×150			960
SA40-400					400								50	1×300			1,290
SA40-500					500								100	1×300			1,610
SA40-600					600								150	1×300			1,950
SA50-200	50	62	47.5	95	200	38.8	11	21	45	20	50°	70	25	1×150	11	M10	1,000
SA50-300					300								75	1×150			1,500
SA50-400					400								50	1×300			2,000
SA50-500					500								100	1×300			2,500
SA50-600					600								150	1×300			3,000

CE TYPE

− Non-Clearance Adjustable Type −

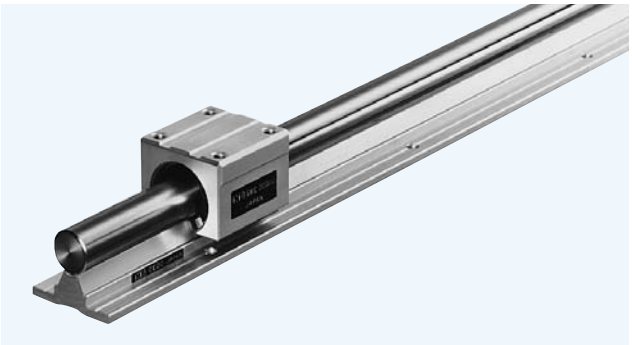

part number structure example

CES **25** - **2** - **500**

specification

CE	standard
CES	anticorrosion

total length

shaft diameter

number of blocks attached to one shaft

part number		shaft diameter	assembly dimension			block dimension								major dimensions				
standard	anticorrosion	mm	H mm	h mm	W_1 mm	W_2 mm	L_1 mm	B_1 mm	C mm	T_1 mm	ℓ mm	S_1	F mm	W_3 mm	B_2 mm	T_2 mm	P mm	S_2 mm
CE16	**CES16**	16	45	25	2.5	45	45	32	30	9	12	M5	33	40	30	5	150	5.5
CE20	**CES20**	20	50	27	1.5	48	50	35	35	11	12	M6	39	45	30	5	150	5.5
CE25	**CES25**	25	60	33	2.5	60	65	40	40	14	12	M6	47	55	35	6	200	6.5
CE30	**CES30**	30	70	37	5	70	70	50	50	15	18	M8	56	60	40	7	200	6.5

* Longer length are available. Please contact NB in case of the length exceeds 2,000mm.

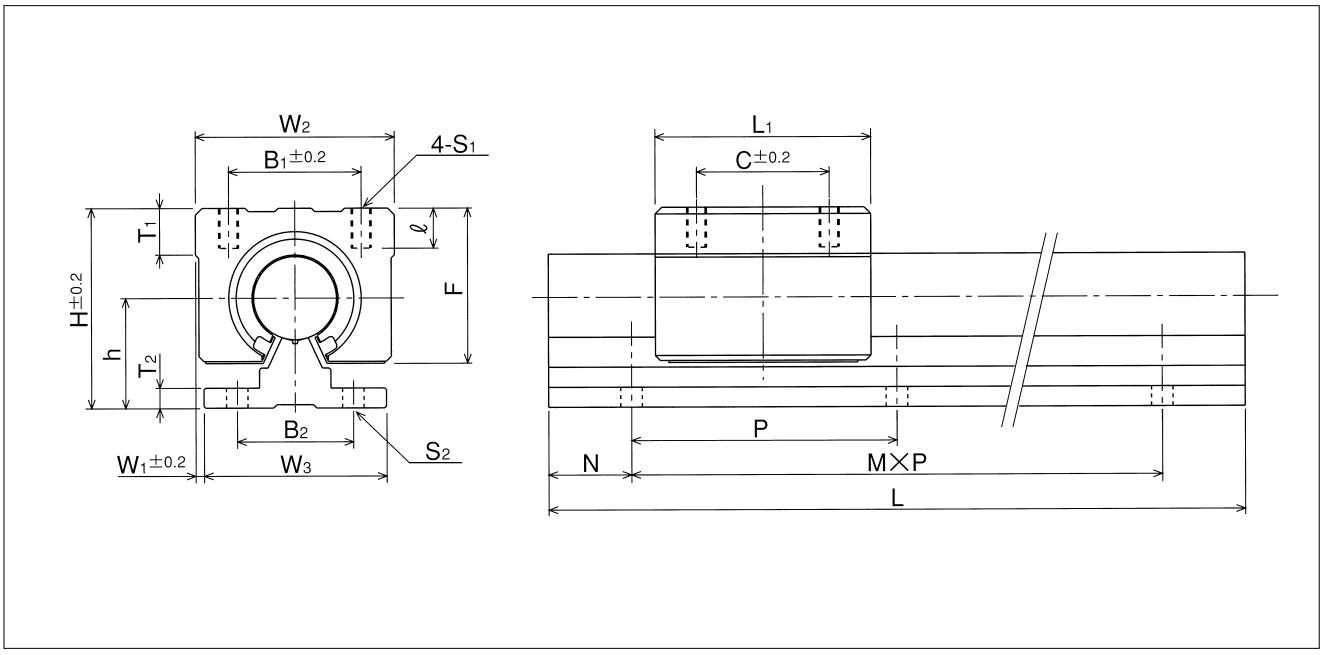

rail dimensions *L(M,N) mm	basic load rating dynamic C N	basic load rating static Co N	mass block g	mass rail kg/m	size
300(1,75) 500(3,25) 800(5,25) 1,000(6,50) 1,500(9,75) 1,800(11,75) 2,000(13,25)	774	1,180	150	2.58	**16**
300(1,75) 500(3,25) 800(5,25) 1,000(6,50) 1,500(9,75) 1,800(11,75) 2,000(13,25)	882	1,370	200	3.49	**20**
300(1,50) 500(2,50) 800(3,100) 1,000(4,100) 1,500(7,50) 1,800(8,100) 2,000(9,100)	980	1,570	450	5.31	**25**
300(1,50) 500(2,50) 800(3,100) 1,000(4,100) 1,500(7,50) 1,800(8,100) 2,000(9,100)	1,570	2,740	630	7.39	**30**

1N≒0.102kgf

CD TYPE

− Clearance Adjustable Type −

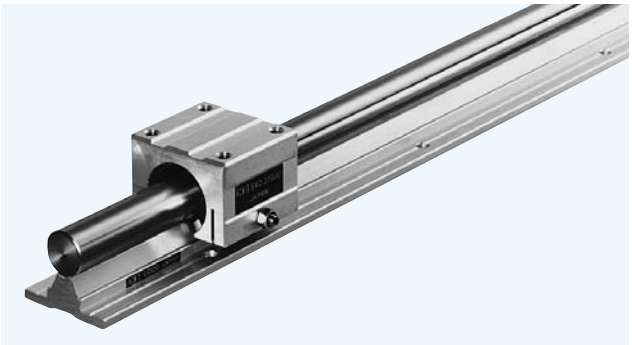

part number structure example

CDS **25** - **2** - **500**

specification

CD	standard
CDS	anticorrosion

shaft diameter

number of blocks attached to one shaft

total length

part number		shaft diameter	assembly dimensions			block dimensions									major dimensions				
standard	anticorrosion	mm	H mm	h mm	W_1 mm	W_2 mm	L_1 mm	B_1 mm	C mm	T_1 mm	ℓ mm	S_1	G mm	F mm	W_3 mm	B_2 mm	T_2 mm	P mm	S_2 mm
CD16	**CDS16**	16	45	25	5	50	45	36	30	9	12	M5	6	33	40	30	5	150	5.5
CD20	**CDS20**	20	50	27	4.5	54	50	40	35	11	12	M6	7	39	45	30	5	150	5.5
CD25	**CDS25**	25	60	33	10.5	76	65	54	40	14	12	M6	7	47	55	35	6	200	6.5
CD30	**CDS30**	30	70	37	9	78	70	58	50	15	18	M8	7	56	60	40	7	200	6.5

* Longer length are available. Please contact NB in case of the length exceeds 2,000mm.

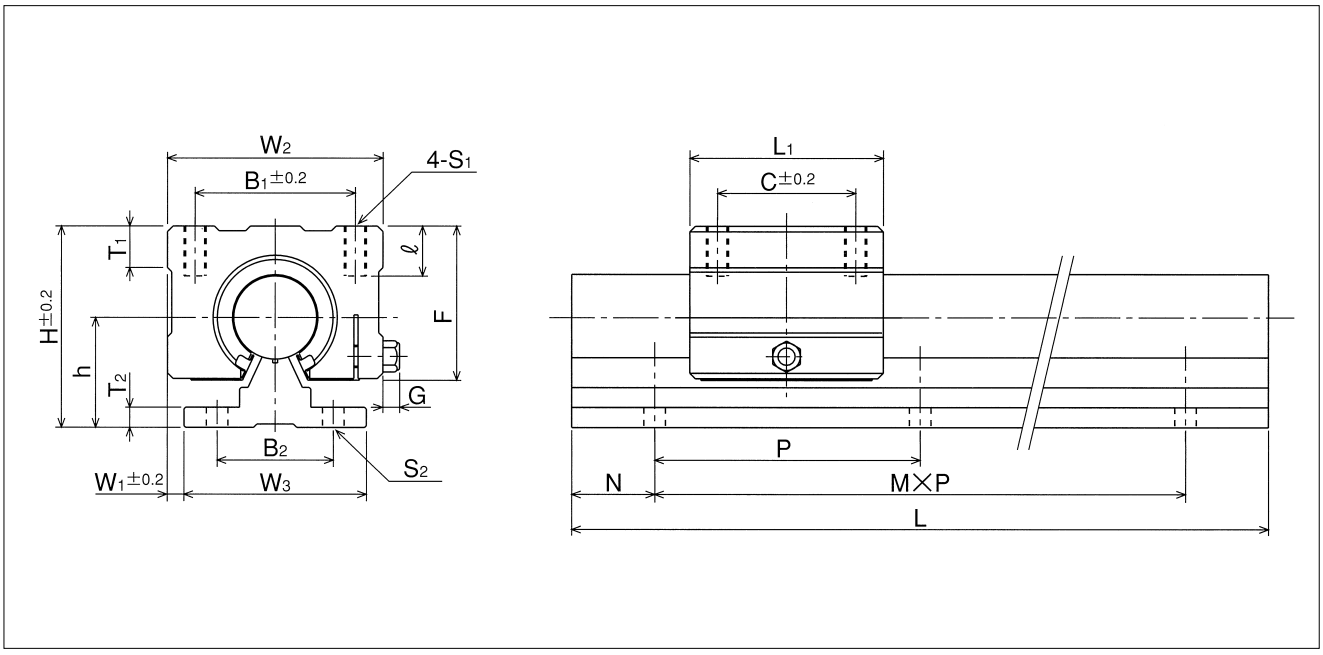

rail dimensions *L(M,N) mm	basic load rating dynamic C N	basic load rating static Co N	mass block g	mass rail kg/m	size
300(1,75) 500(3,25) 800(5,25) 1,000(6,50) 1,500(9,75) 1,800(11,75) 2,000(13,25)	774	1,180	170	2.58	**16**
300(1,75) 500(3,25) 800(5,25) 1,000(6,50) 1,500(9,75) 1,800(11,75) 2,000(13,25)	882	1,370	240	3.49	**20**
300(1,50) 500(2,50) 800(3,100) 1,000(4,100) 1,500(7,50) 1,800(8,100) 2,000(9,100)	980	1,570	580	5.31	**25**
300(1,50) 500(2,50) 800(3,100) 1,000(4,100) 1,500(7,50) 1,800(8,100) 2,000(9,100)	1,570	2,740	720	7.39	**30**

1N≒0.102kgf

SWA TYPE

− Block Type −

(Inch Series)

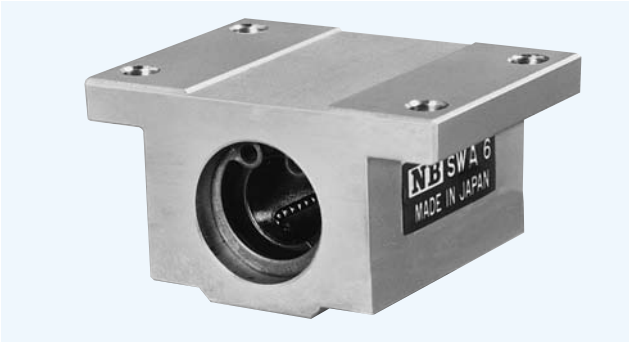

part number structure example

SWA | **20** | **G** | **R** | **UU**

specification

SWA	Standard
SWSA	Anticorrosion

inner contact diameter

retainer material

	standard	anticorrosion
blank	steel	stainless
G	resin	

Self-aligning
(SWA-resin retainer only)

seal

blank	without seal
UU	seals on both sides

part number	major dimensions							
	inner contact diameter		outer dimensions					
		tolerance	h	E	W	L	F	T
			±.001/±0.02	±.001/±0.02				
	inch/mm	inch/μm	inch/mm	inch/mm	inch/mm	inch/mm	inch/mm	inch/mm
SWA 4GUU	.2500 6.350	0 −.00040	.4370 11.100	.8125 20.638	1.625 41.28	1.188 30.16	.813 20.64	.188 4.76
SWA 6GUU	.3750 9.525		.5000 12.700	.8750 22.225	1.750 44.45	1.313 33.34	.938 23.82	.188 4.76
SWA 8GUU	.5000 12.700	0 −9	.6870 17.450	1.0000 25.400	2.000 50.80	1.688 42.86	1.250 31.75	.250 6.35
SWA 10GUU	.6250 15.875		.8750 22.225	1.2500 31.750	2.500 63.50	1.938 49.21	1.625 41.28	.281 7.14
SWA 12GUU	.7500 19.050	0 −.00040	.9370 23.800	1.3750 34.925	2.750 69.85	2.063 52.39	1.750 44.45	.313 7.94
SWA 16GUU	1.0000 25.400	0 −10	1.1870 30.150	1.6250 41.275	3.250 82.55	2.813 71.44	2.188 55.56	.375 9.53
SWA 20GUU	1.2500 31.750	0 −.00050	1.5000 38.100	2.0000 50.800	4.000 101.60	3.625 92.08	2.813 71.44	.438 11.11
SWA 24GUU	1.5000 38.100		1.7500 44.450	2.3750 60.325	4.750 120.65	4.000 101.60	3.250 82.55	.500 12.70
SWA 32GUU	2.0000 50.800	0 −12	2.1250 53.975	3.0000 76.200	6.000 152.40	5.000 127.00	4.063 103.19	.625 15.88

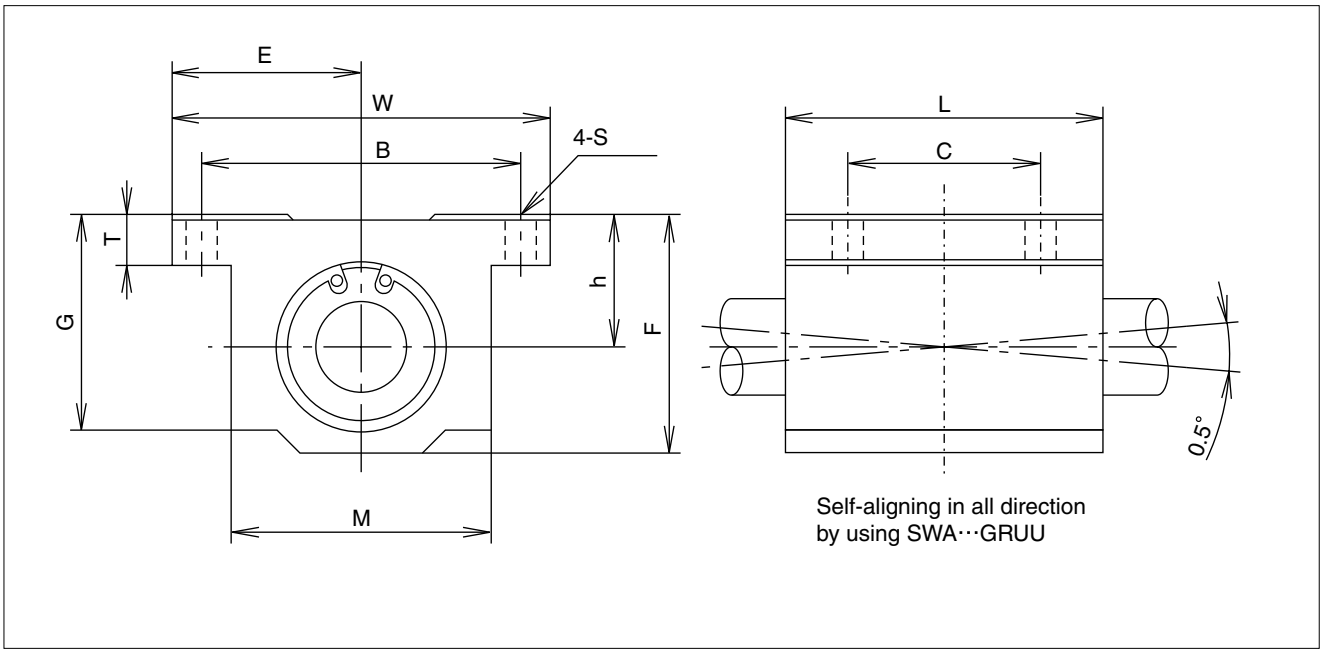

					basic load rating		mass	
		mounting dimension			dynamic	static		
G	M	B	C	S	C	Co		part number
		±.01/±0.2	±.01/±0.2					
inch/mm	inch/mm	inch/mm	inch/mm	inch/mm	N	N	g	
.750 19.05	1.000 25.40	1.312 33.33	.750 19.05	.156 4.0	206	265	45	**SWA 4GUU**
.875 22.23	1.125 28.58	1.437 36.50	.875 22.23	.156 4.0	225	314	62	**SWA 6GUU**
1.125 28.58	1.375 34.93	1.688 42.88	1.000 25.40	.156 4.0	510	784	130	**SWA 8GUU**
1.437 36.50	1.750 44.45	2.125 53.98	1.125 28.58	.188 4.8	774	1,180	240	**SWA 10GUU**
1.563 39.69	1.875 47.63	2.375 60.33	1.250 31.75	.188 4.8	862	1,370	290	**SWA 12GUU**
1.938 49.21	2.375 60.33	2.875 73.03	1.750 44.45	.219 5.6	980	1,570	615	**SWA 16GUU**
2.500 63.50	3.000 76.20	3.500 88.90	2.000 50.80	.219 5.6	1,570	2,740	1,300	**SWA 20GUU**
2.875 73.03	3.500 88.90	4.125 104.78	2.500 63.50	.281 7.2	2,160	4,020	1,900	**SWA 24GUU**
3.625 92.08	4.500 114.30	5.250 133.35	3.250 82.55	.406 10.5	3,820	7,940	3,600	**SWA 32GUU**

SI UNIT 1N ≒ 0.225lbs
1kg ≒ 2.205lbs

SWJ TYPE

− Clearance Adjustable Block Type −

(Inch Series)

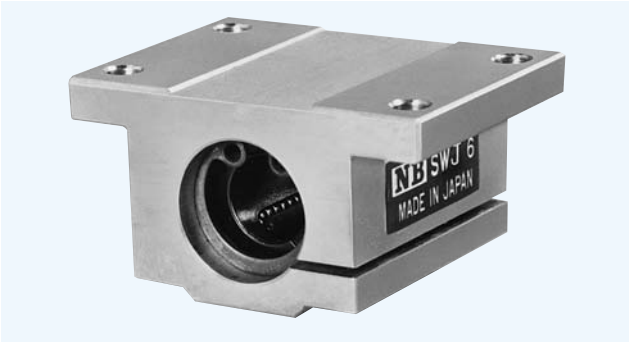

part number structure example

SWJ **20** **G** **R** **UU**

specification

SWJ	Standard
SWSJ	Anticorrosion

inner contact diameter

retainer material

	standard	anticorrosion
blank	steel	stainless
G	resin	

seal

blank	without seal
UU	seals on both sides

Self-aligning
(SWA-resin retainer only)

part number	major dimensions						
	inner contact diameter	outer dimensions					
		h ±.001/±0.02	E ±.001/±0.02	W	L	F	T
	inch/mm	inch/mm	inch/mm	inch/mm	inch/mm	inch/mm	inch/mm
SWJ 8GUU	.5000 12.700	.6870 17.450	1.0000 25.400	2.000 50.80	1.688 42.86	1.250 31.75	.250 6.35
SWJ 10GUU	.6250 15.875	.8750 22.225	1.2500 31.750	2.500 63.50	1.938 49.21	1.625 41.28	.281 7.14
SWJ 12GUU	.7500 19.050	.9370 23.800	1.3750 34.925	2.750 69.85	2.063 52.39	1.750 44.45	.313 7.94
SWJ 16GUU	1.0000 25.400	1.1870 30.150	1.6250 41.275	3.250 82.55	2.813 71.44	2.188 55.56	.375 9.53
SWJ 20GUU	1.2500 31.750	1.5000 38.100	2.0000 50.800	4.000 101.60	3.625 92.08	2.813 71.44	.438 11.11
SWJ 24GUU	1.5000 38.100	1.7500 44.450	2.3750 60.325	4.750 120.65	4.000 101.60	3.250 82.55	.500 12.70
SWJ 32GUU	2.0000 50.800	2.1250 53.975	3.0000 76.200	6.000 152.40	5.000 127.00	4.063 103.19	.625 15.88

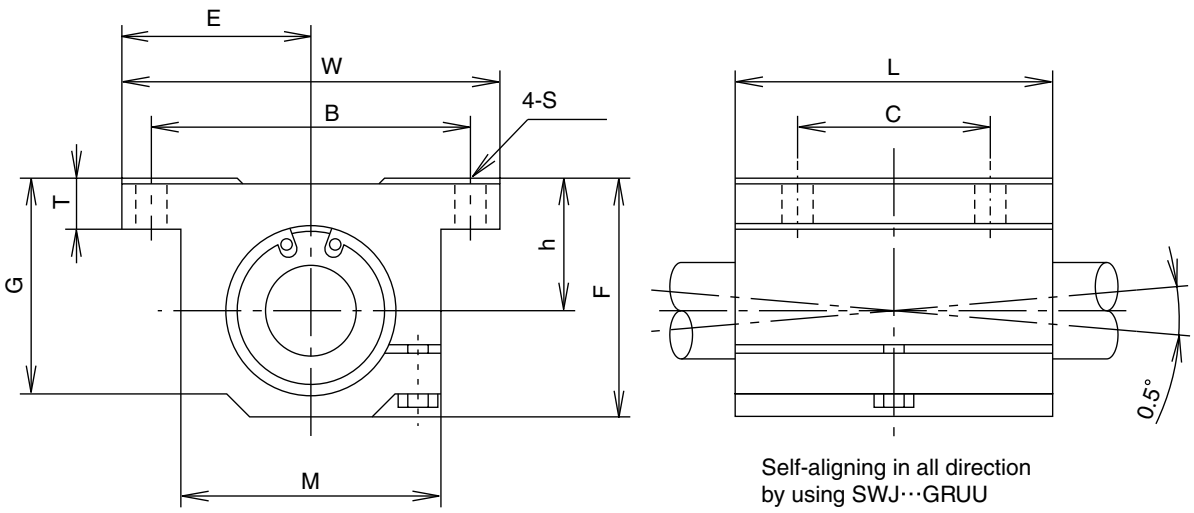

Self-aligning in all direction
by using SWJ···GRUU

					basic load rating		mass	
		mounting dimensions			dynamic	static		
G	M	B	C	S	C	Co		part number
		±.01/±0.2	±.01/±0.2					
inch/mm	inch/mm	inch/mm	inch/mm	inch/mm	N	N	g	
1.125 28.58	1.375 34.93	1.688 42.88	1.000 25.40	.156 4.0	510	784	130	**SWJ 8GUU**
1.437 36.50	1.750 44.45	2.125 53.98	1.125 28.58	.188 4.8	774	1,180	240	**SWJ 10GUU**
1.563 39.69	1.875 47.63	2.375 60.33	1.250 31.75	.188 4.8	862	1,370	290	**SWJ 12GUU**
1.938 49.21	2.375 60.33	2.875 73.03	1.750 44.45	.219 5.6	980	1,570	615	**SWJ 16GUU**
2.500 63.50	3.000 76.20	3.500 88.90	2.000 50.80	.219 5.6	1,570	2,740	1,300	**SWJ 20GUU**
2.875 73.03	3.500 88.90	4.125 104.78	2.500 63.50	.281 7.2	2,160	4,020	1,900	**SWJ 24GUU**
3.625 92.08	4.500 114.30	5.250 133.35	3.250 82.55	.406 10.5	3,820	7,940	3,600	**SWJ 32GUU**

SI UNIT 1N ≒ 0.225lbs
1kg ≒ 2.205lbs

SWD TYPE

− Open Block Type −

(Inch Series)

part number structure example

SWD 20 G R UU

specification

SWD	Standard
SWSD	Anticorrosion

inner contact diameter

retainer material

	standard	anticorrosion
blank	steel	stainless
G	resin	

Self-aligning
(SWA-resin retainer only)

seal

blank	without seal
UU	seals on both sides

part number	major dimensions							
	inner contact diameter	outer dimensions						
		h	E	W	L	F	T	G
		±.001/±0.02	±.001/±0.02					
	inch/mm	inch/mm	inch/mm	inch/mm	inch/mm	inch/mm	inch/mm	inch/mm
SWD 8GUU	.5000 12.700	.6870 17.450	1.0000 25.400	2.000 50.80	1.500 38.10	1.100 27.94	.250 6.35	.688 17.5
SWD 10GUU	.6250 15.875	.8750 22.225	1.2500 31.750	2.500 63.50	1.750 44.45	1.375 34.93	.281 7.14	.875 22.23
SWD 12GUU	.7500 19.050	.9370 23.800	1.3750 34.950	2.750 69.85	1.875 47.63	1.535 39.00	.315 8.00	.937 23.80
SWD 16GUU	1.0000 25.400	1.1870 30.150	1.6250 41.300	3.250 82.55	2.625 66.68	1.975 50.17	.375 9.53	1.188 30.18
SWD 20GUU	1.2500 31.750	1.5000 38.100	2.0000 50.800	4.000 101.60	3.375 85.73	2.485 63.12	.437 11.10	1.500 38.10
SWD 24GUU	1.5000 38.100	1.7500 44.450	2.3750 60.325	4.750 120.65	3.750 95.25	2.910 73.90	.500 12.70	1.750 44.45
SWD 32GUU	2.0000 50.800	2.1250 53.975	3.0000 76.200	6.000 152.4	4.750 120.65	3.660 92.90	.625 15.88	2.250 57.15

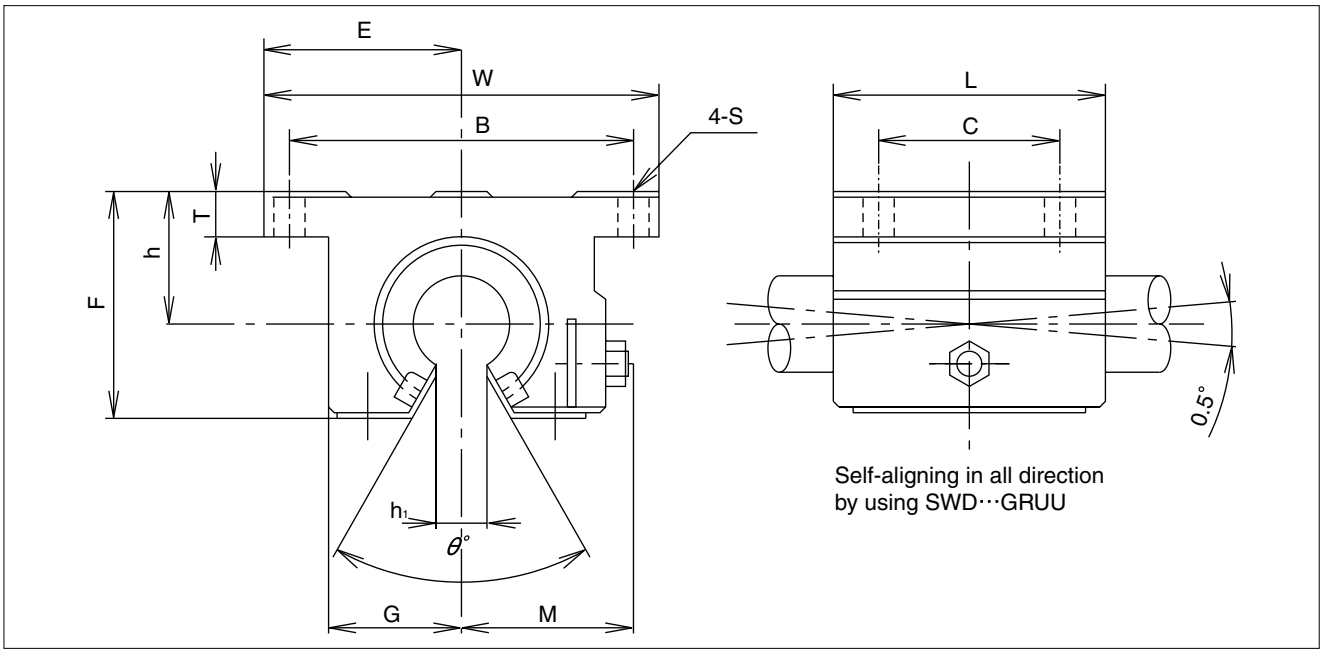

						basic load rating		mass	
			mounting dimensions			dynamic	static		
M	h_1	θ	B	C	S	C	Co		Part number
			±.01/±0.2	±.01/±0.2					
inch/mm	inch/mm		inch/mm	inch/mm	inch/mm	N	N	g	
.98 24.89	.3425 8.70	80°	1.688 42.88	1.000 25.40	.156 4.0	510	784	98	**SWD 8GUU**
1.15 29.21	.375 9.53	80°	2.125 53.98	1.125 28.58	.188 4.8	774	1,180	185	**SWD 10GUU**
1.23 31.24	.4375 11.11	60°	2.375 60.33	1.250 31.75	.188 4.8	862	1,370	235	**SWD 12GUU**
1.48 37.59	.5625 14.29	50°	2.875 73.03	1.750 44.45	.218 5.6	980	1,570	530	**SWD 16GUU**
1.88 47.75	.625 15.88	50°	3.500 88.90	2.000 50.80	.218 5.6	1,570	2,740	1,080	**SWD 20GUU**
2.12 53.85	.750 19.05	50°	4.125 104.78	2.500 63.50	.281 7.4	2,160	4,020	1,620	**SWD 24GUU**
2.70 68.58	1.00 25.40	50°	5.250 133.35	3.250 82.55	.406 10.5	3,820	7,940	3,100	**SWD 32GUU**

SI UNIT 1N ≒ 0.225lbs
1kg ≒ 2.205lbs

RBW TYPE

− Resin Block Type −

(Inch Series)

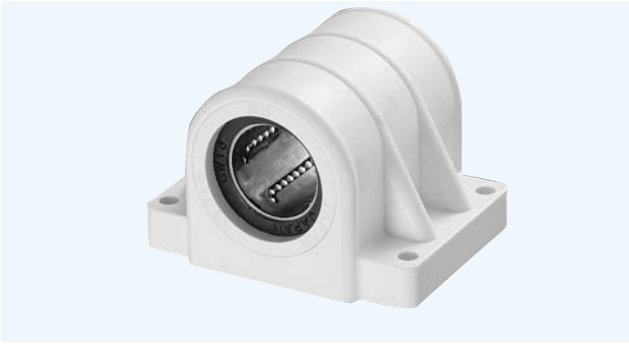

part number structure example

RBW **16**

RBW type

inner contact diameter

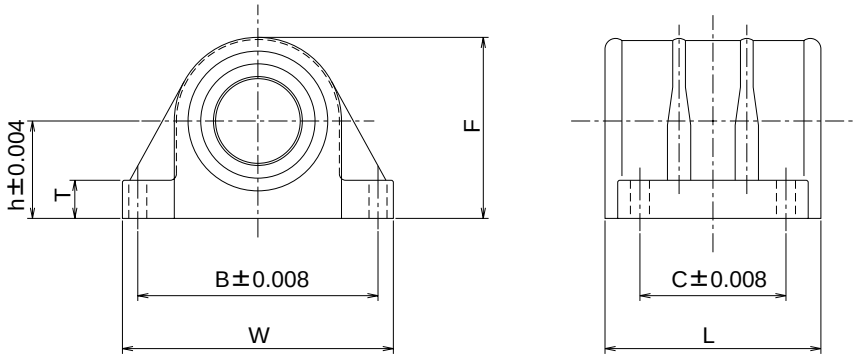

part number	main dimensions										basic load rating		mass
	inner contact dia.		outer dimentions				mounting dimentions				dynamic	static	
		tol.	H	W	L	F	T	B	C	S	C	Co	
	inch/mm	inch/mm	inch/mm	inch/mm	inch/mm	inch/mm	inch/mm	inch/mm	inch/mm	inch/mm	N	N	g
RBW 8	0.5000 12.700	0 −0.00040	0.6870 17.450	2.000 50.80	1.5937 40.481	1.2500 31.750	0.5000 12.700	1.688 42.875	1.000 25.400	0.157 4.0	510	784	51
RBW 10	0.6250 15.875	0 −9	0.8750 22.225	2.500 63.50	1.8437 46.831	1.6250 41.275	0.5625 14.288	2.125 53.975	1.125 28.575	0.189 4.8	774	1180	99
RBW 12	0.7500 19.050	0 −0.00040	0.9370 23.800	2.750 69.85	1.9687 50.006	1.7500 44.450	0.6250 15.875	2.375 60.325	1.250 31.750	0.189 4.8	862	1370	129
RBW 16	1.0000 25.400	0 −10	1.1870 30.150	3.250 82.55	2.5937 65.881	2.1870 55.563	0.7500 19.050	2.875 73.025	1.750 44.450	0.220 5.6	980	1570	242

*RBW type has side seals as standard.

1N ≒ 0.225lbs
1kg ≒ 2.205lbs

WH-A TYPE

− Shaft End Supporter −

(Inch Series)

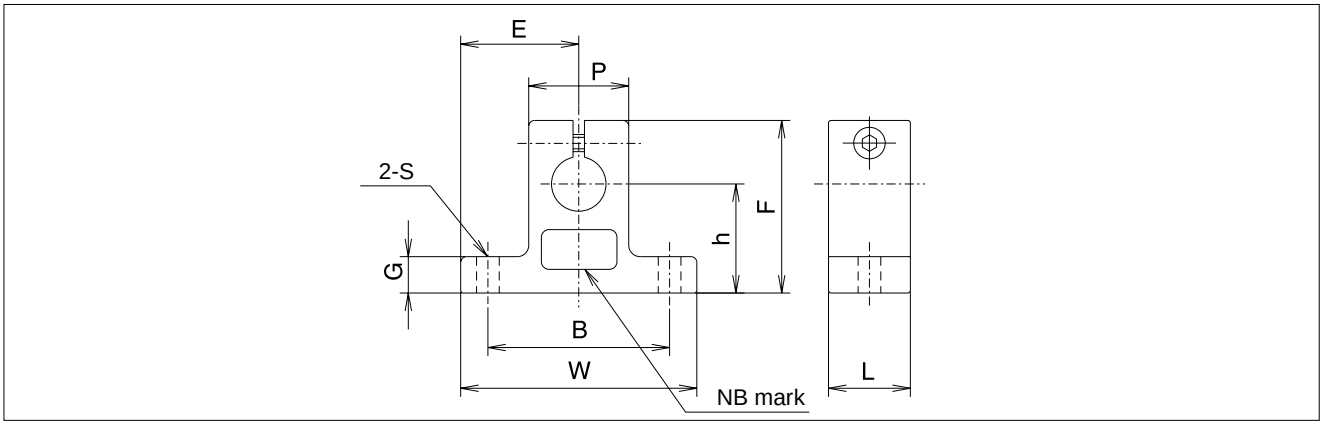

part number	shaft diameter inch/mm	major dimensions inch/mm h ±.001 ±0.02	E ±.005 ±0.1	W	L	F	G	P	B ±.01 ±0.2	S	BOLT	mass g
WH 4A	.2500 6.350	.6875 17.463	.7500 19.050	1.500 38.10	.500 12.70	1.063 27.00	.250 6.35	.500 12.70	1.125 28.58	.156 4.0	# 6	15
WH 6A	.3750 9.525	.7500 19.050	.8125 20.637	1.625 41.28	.563 14.30	1.187 30.16	.250 6.35	.688 17.46	1.250 31.75	.156 4.0	# 6	21
WH 8A	.5000 12.700	1.0000 25.400	1.0000 25.400	2.000 50.80	.625 15.88	1.625 41.28	.250 6.35	.875 22.23	1.500 38.10	.188 4.8	# 8	35
WH 10A	.6250 15.875	1.0000 25.400	1.2500 31.750	2.500 63.50	.688 17.46	1.750 44.45	.313 7.94	1.000 25.40	1.875 47.63	.218 5.6	#10	52
WH 12A	.7500 19.050	1.2500 31.750	1.2500 31.750	2.500 63.50	.750 19.05	2.063 52.40	.313 7.94	1.250 31.75	2.000 50.80	.218 5.6	#10	74
WH 16A	1.0000 25.400	1.5000 38.100	1.5315 38.900	3.063 77.80	1.000 25.40	2.500 63.50	.375 9.53	1.500 38.10	2.500 63.50	.281 7.2	1/4	136
WH 20A	1.2500 31.750	1.7500 44.450	1.8750 47.625	3.750 95.25	1.125 28.58	3.000 76.20	.438 11.14	2.000 50.80	3.000 76.20	.346 8.8	5/16	254
WH 24A	1.5000 38.100	2.0000 50.800	2.1875 55.550	4.375 111.13	1.250 31.75	3.437 87.30	.500 12.70	2.250 57.15	3.500 88.90	.346 8.8	5/16	340
WH 32A	2.0000 50.800	2.5000 63.500	2.7500 69.850	5.500 139.70	1.500 38.10	4.375 111.13	.625 15.88	3.000 76.20	4.500 114.30	.406 10.5	3/8	670

1kg ≒ 2.205lbs

WA TYPE

− Shaft Support Rail −

(Inch Series)

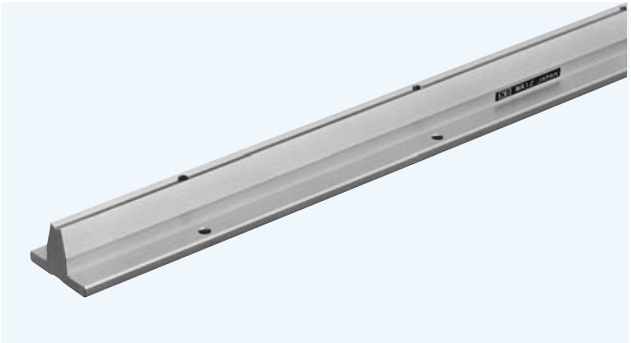

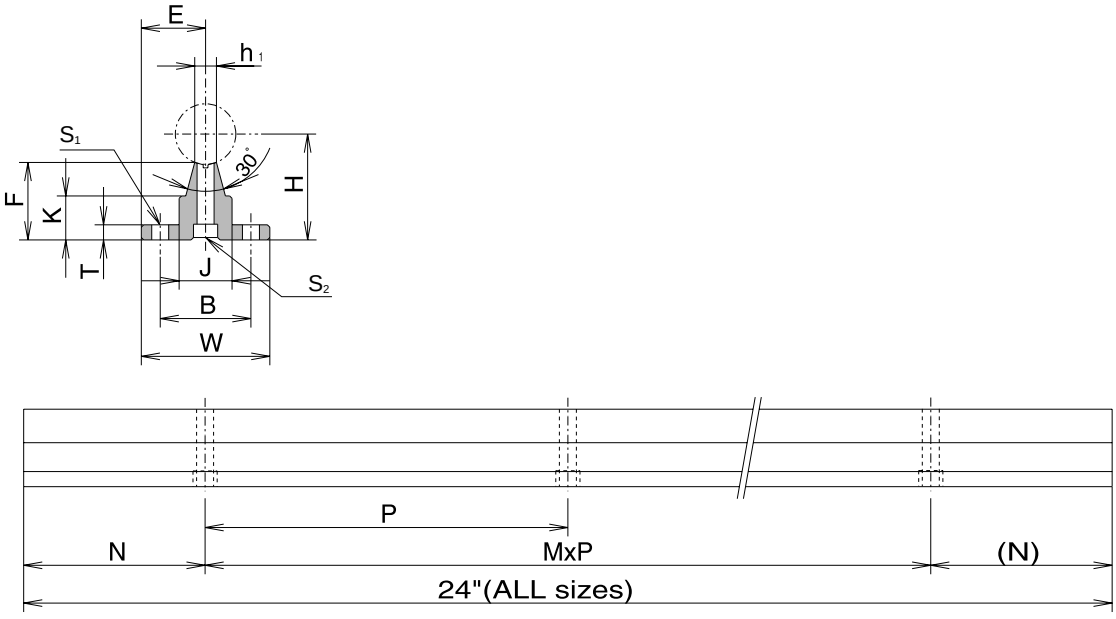

part number	shaft diameter	major dimensions								mounting dimensions							mass
		H	E	W	F	T	K	J	h_1	B	N	M×P	S_1		S_2		
		±.001 ±0.02	±.005 ±0.1							±.01 ±0.2			hole	bolt#	hole	bolt#	
	inch/mm	inch/mm	inch/mm	inch/mm	inch/mm	inch/mm	inch/mm	inch/mm	inch/mm	inch/mm	inch/mm	inch/mm	inch/mm	inch/mm	inch/mm	inch/mm	g
WA 8-24PD	.5000 12.700	1.125 28.575	.7500 19.050	1.500 38.10	.903 22.94	.188 4.78	.466 11.84	.500 12.70	.255 6.48	1.000 25.40	2 50.8	5×4 5×101.6	.169 4.3	# 6	.169 4.3	# 6	600
WA10-24PD	.6250 15.875	1.125 28.575	.8125 20.638	1.625 41.28	.841 21.36	.250 6.35	.423 10.74	.500 12.70	.276 7.01	1.125 28.58	2 50.8	5×4 5×101.6	.193 4.9	# 8	.193 4.9	# 8	680
WA12-24PD	.7500 19.050	1.500 38.100	.8750 22.225	1.750 44.45	1.158 29.41	.250 6.35	.592 15.04	.625 15.88	.322 8.18	1.250 31.75	3 76.2	3×6 3×152.4	.221 5.6	#10	.221 5.6	#10	910
WA16-24PD	1.0000 25.400	1.750 44.450	1.0625 26.988	2.125 53.98	1.280 32.51	.250 6.35	.727 18.47	.875 22.23	.359 9.12	1.500 38.10	3 76.2	3×6 3×152.4	.281 7.1	1/4	.281 7.1	1/4	1290
WA20-24PD	1.2500 31.750	2.125 53.975	1.2500 31.750	2.500 63.50	1.537 39.04	.313 7.95	.799 20.29	1.100 27.94	.437 11.10	1.875 47.63	3 76.2	3×6 3×152.4	.343 8.7	5/16	.343 8.7	5/16	1810
WA24-24PD	1.5000 38.100	2.500 63.500	1.5000 38.100	3.000 76.20	1.798 45.67	.375 9.53	.922 23.42	1.375 34.93	.558 14.17	2.250 57.15	4 101.6	2×8 2×203.2	.343 8.7	5/16	.406 10.3	3/8	2610
WA32-24PD	2.0000 50.800	3.250 82.550	1.8750 47.625	3.750 95.25	2.322 58.98	.500 12.70	1.450 36.83	1.500 38.10	.800 20.32	2.750 69.85	4 101.6	2×8 2×203.2	.406 10.3	3/8	.531 13.5	1/2	4380

All sizes are also available without pre-drilled mounting holes. Specity Part Number as WA ##-## when ordering.Complete shaft-rail assemblies are also available as well as custom drilling and lengths. Please send drawing for quotation on custom contigulations.

1kg ≒ 2.205lbs